O P E R A T I N G  M A N U A L



# Front Load Single and Dual Sensors

PN 074-1560

INFICON

## Trademarks

The trademarks of the products mentioned in this manual are held by the companies that produce them.

RateWatcher™ is a registered trademark of INFICON GmbH.

Teflon® and Viton® are registered trademarks of E. I. duPont de Nemours Company or its affiliates.

Swagelok® is a registered trademark of Swagelok Company.

VCR®, VCO®, and Ultra-Torr® are registered trademarks of Cajon Company.

ConFlat® is a registered trademark of Varian Corporation.

FOMBLIN® is a registered trademark of Ausimont SpA.

Microdot® is a registered trademark of Microdot Corp.

Scotch-Brite™ is a trademark of 3M.

All other brand and product names are trademarks or registered trademarks of their respective companies.

## Disclaimer

The information contained in this manual is believed to be accurate and reliable. However, INFICON assumes no responsibility for its use and shall not be liable for any special, incidental, or consequential damages related to the use of this product.

Due to our continuing program of product improvements, specifications are subject to change without notice.

## Copyright

©2026 All rights reserved.
Reproduction or adaptation of any part of this document without permission is unlawful.

# Warranty

WARRANTY AND LIABILITY - LIMITATION: Seller warrants the products manufactured by it, or by an affiliated company and sold by it, and described on the reverse hereof, to be, for the period of warranty coverage specified below, free from defects of materials or workmanship under normal proper use and service. The period of warranty coverage is specified for the respective products in the respective Seller instruction manuals for those products but shall not be less than one (1) year from the date of shipment thereof by Seller. Seller's liability under this warranty is limited to such of the above products or parts thereof as are returned, transportation prepaid, to Seller's plant, not later than thirty (30) days after the expiration of the period of warranty coverage in respect thereof and are found by Seller's examination to have failed to function properly because of defective workmanship or materials and not because of improper installation or misuse and is limited to, at Seller's election, either (a) repairing and returning the product or part thereof, or (b) furnishing a replacement product or part thereof, transportation prepaid by Seller in either case. In the event Buyer discovers or learns that a product does not conform to warranty, Buyer shall immediately notify Seller in writing of such non-conformity, specifying in reasonable detail the nature of such non-conformity. If Seller is not provided with such written notification, Seller shall not be liable for any further damages which could have been avoided if Seller had been provided with immediate written notification.

THIS WARRANTY IS MADE AND ACCEPTED IN LIEU OF ALL OTHER WARRANTIES, EXPRESS OR IMPLIED, WHETHER OF MERCHANTABILITY OR OF FITNESS FOR A PARTICULAR PURPOSE OR OTHERWISE, AS BUYER'S EXCLUSIVE REMEDY FOR ANY DEFECTS IN THE PRODUCTS TO BE SOLD HEREUNDER. All other obligations and liabilities of Seller, whether in contract or tort (including negligence) or otherwise, are expressly EXCLUDED. In no event shall Seller be liable for any costs, expenses or damages, whether direct or indirect, special, incidental, consequential, or other, on any claim of any defective product, in excess of the price paid by Buyer for the product plus return transportation charges prepaid.

No warranty is made by Seller of any Seller product which has been installed, used or operated contrary to Seller's written instruction manual or which has been subjected to misuse, negligence or accident or has been repaired or altered by anyone other than Seller or which has been used in a manner or for a purpose for which the Seller product was not designed nor against any defects due to plans or instructions supplied to Seller by or for Buyer.

This manual is intended for private use by INFICON® Inc. and its customers. Contact INFICON before reproducing its contents.

NOTE: These instructions do not provide for every contingency that may arise in connection with the installation, operation or maintenance of this equipment. Should you require further assistance, please contact INFICON.

# Table Of Contents

Cover Page

Title Page

Trademarks

Disclaimer

Copyright

Warranty

**Chapter 1**

**Introduction**

1.1 Introduction . . . . . 1-1
1.2 Definition of Notes, Cautions and Warnings . . . . . 1-2
1.3 How to Contact INFICON . . . . . 1-2
1.3.1 Returning Sensor to INFICON . . . . . 1-3
1.4 Unpacking and Inspection . . . . . 1-3
1.4.1 Single Sensor Configuration Overview and Parts . . . . . 1-4
1.4.2 Dual Sensor Configuration Overview and Parts . . . . . 1-5
1.5 Front Load Single Sensors (PN SL-XXXXX) . . . . . 1-6
1.5.1 Specifications . . . . . 1-7
1.5.2 Materials . . . . . 1-8
1.5.3 Installation Requirements . . . . . 1-8
1.5.4 Single Sensor Drawings . . . . . 1-9
1.6 Front Load Dual Sensor (PN DL-AXXX) . . . . . 1-14
1.6.1 Specifications . . . . . 1-14
1.6.2 Materials . . . . . 1-15
1.6.3 Installation Requirements . . . . . 1-15
1.6.4 Dual Sensor Drawings . . . . . 1-16
1.7 Shutter Module (PN 750-210-G1 and 750-210-G3) . . . . . 1-19
1.7.1 Specifications . . . . . 1-19
1.7.2 Shutter Module Drawings . . . . . 1-20
1.8 Feedthroughs . . . . . 1-23
1.8.1 Specifications for 2.54 cm (1 in.) Bolt . . . . . 1-23
1.8.2 Specifications for CF40 (2-3/4 in. ConFlat) . . . . . 1-24
1.8.3 Feedthrough Drawings . . . . . 1-25

PN 074-156O

**Chapter 2**

**Sensor Installation**

2.1 Pre-installation Sensor Check . . . . . 2-1
2.1.1 Sensor Check with XTC/3, IC6, or Cygnus 2 Deposition Controller . . . . . 2-1
2.1.2 Sensor Check with STM-2XM, STM-3, SQM-160, SQC-310, SQM-242, or IQM-233 Deposition Controller/Monitor . . . . . 2-2
2.1.3 Sensor Check with Q-pod™ or STM-2 Deposition Monitor. . . . . 2-3
2.1.4 Sensor Shutter Check . . . . . 2-4
2.2 Sensor Installation Guidelines . . . . . 2-4
2.3 Sensor Installation Procedure . . . . . 2-7
2.3.1 Tube Bending . . . . . 2-10
2.4 Sensor Shutter Module Installation on Existing Equipment . . . . . 2-11
2.4.1 Shutter Module Installation on a Standard Crystal Sensor (PN SL-A0XXX-CN) . . . . . 2-11
2.4.2 Shutter Module Installation on a Right Angle Crystal Sensor (PN SL-B0XXX-CN) . . . . . 2-11

**Chapter 3**

**Solenoid Valve Assembly Installation**

3.1 Introduction. . . . . 3-1
3.2 Installation with a 2.54 cm (1 in.) Bolt Feedthrough . . . . . 3-1
3.3 Installation with a CF40 (2-3/4 in. ConFlat) Feedthrough. . . . . 3-2
3.4 Pneumatic Connections . . . . . 3-4
3.5 Electrical Connections . . . . . 3-4
3.6 Solenoid Valve Drawings . . . . . 3-4

**Chapter 4**

**Maintenance and Spare Parts**

4.1 General Precautions. . . . . 4-1
4.1.1 Handle the Crystal with Care . . . . . 4-1
4.1.2 Use the Optimum Crystal Type . . . . . 4-1
4.1.3 Maintain the Temperature of the Crystal . . . . . 4-2
4.1.4 Crystal Concerns when Opening the Chamber . . . . . 4-2
4.2 Crystal Replacement Instructions. . . . . 4-2
4.3 Sensor Maintenance . . . . . 4-5
4.3.1 Adjusting the Leaf Spring . . . . . 4-5
4.3.2 Cleaning the Crystal Holder . . . . . 4-6
4.3.3 Adjusting the Crystal Holder Retainer Spring. . . . . 4-7
4.3.4 Replacing the Finger Spring. . . . . 4-8
4.3.5 Lubricating the Shutter Module . . . . . 4-9
4.4 Spare Parts and Accessories . . . . . 4-10

PN 074-156O

## Chapter 5
## Troubleshooting


5.1 Troubleshooting Tools . . . . . 5-1
5.1.1 Symptom, Cause, Remedy . . . . . 5-1
5.1.2 Digital Multimeter . . . . . 5-3
5.1.2.1 Electrical Isolation Check . . . . . 5-4
5.1.2.2 Electrical Continuity Check . . . . . 5-6


PN 074-156O

*This page is intentionally blank.*

PN 074-156O

# Chapter 1
# Introduction

## 1.1 Introduction

INFICON Front Load Sensors (see Figure 1-1) offer proven reliability and durability combined with excellent thermal stability. The front load design allows for easy insertion of the crystal holder in applications lacking sufficient room for side access. Because they are assembled mechanically rather than soldered, parts can conveniently be replaced in the field. Sensors can be ordered individually or in a sensor and feedthrough combination that can be either welded or assembled with Ultra-Torr® O-ring compression fittings.

*Figure 1-1 Front Load Sensors*

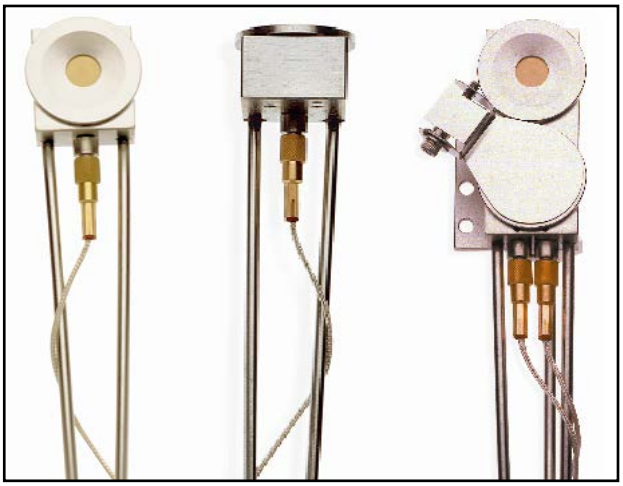

The Front Load Sensor comes in two styles: Single or Dual.

The Front Load Single Sensor comes in two sensor configurations: Standard or Right Angle (Compact).

- Standard configuration—installed from the side or bottom of the chamber, with the cooling tubes aligned parallel to the crystal face.
- Right Angle configuration—installed through the top of the vacuum system, with the water cooling tubes aligned perpendicular to the crystal face.

For the Front Load Dual Sensor, a Standard configuration (i.e., waterlines parallel to the crystal face) is available.

Optionally, single sensors can be ordered with a pneumatically driven crystal shutter to protect the crystal during source warm-up, or when the sensor is not used during deposition of an alternate material, or to extend crystal life when used with RateWatcher™ or rate sampling.

**NOTE:** Crystal shutters are standard on Front Load Dual Sensors.

PN 074-156O

## 1.2 Definition of Notes, Cautions and Warnings

Before using this manual, please take a moment to understand the Cautions and Warnings used throughout. They provide pertinent information that is useful in achieving maximum instrument efficiency while ensuring personal safety.

**NOTE:** Notes provide additional information about the current topic.

**CAUTION**

**Failure to heed these messages could result in damage to the instrument.**

**WARNING**

**Failure to heed these messages could result in personal injury.**

## 1.3 How to Contact INFICON

Worldwide customer support information is available under **Support >> Support Worldwide** at www.inficon.com:

- Sales and Customer Service
- Technical Support
- Repair Service

When communicating with INFICON about a Front Load Sensor, please have the following information readily available:

- The Sales Order or Purchase Order number of the Front Load Sensor purchase.
- The Lot Identification Code, located on the side surface of the sensor head.
- A description of the problem.
- The exact wording of any error messages that may have been received.
- An explanation of any corrective action that may have already been attempted.

PN 074-156O

### 1.3.1 Returning Sensor to INFICON

Do not return any sensor component to INFICON before speaking with a Customer Support Representative and obtaining a Return Material Authorization (RMA) number. Front Load Sensors will not be serviced without an RMA number.

Packages delivered to INFICON without an RMA number will be held until the customer is contacted. This will result in delays in servicing the Front Load Sensor.

Prior to being given an RMA number, a completed Declaration Of Contamination (DoC) form will be required. DoC forms must be approved by INFICON before an RMA number is issued. INFICON may require that the sensor be sent to a designated decontamination facility, not to the factory.

## 1.4 Unpacking and Inspection

1. If the Front Load Sensor has not been removed from its packaging, do so now. The sensor and accessories are packaged in a single cardboard carton with a rigid foam insert. Carefully remove the packaged accessories before removing the sensor.
2. Carefully examine the sensor for damage that may have occurred during shipping. It is especially important to note obvious rough handling on the outside of the container. *Immediately report any damage to the carrier and to INFICON.*

   **NOTE:** Do not discard the packaging material until inventory has been taken and installation is successful.
3. Refer to the invoice and the information contained in section 1.4.1 or section 1.4.2 on page 1-5 to take inventory.
4. To install the sensor, see Chapter 2, 65 Sensor Installation.
5. For additional information or technical assistance, contact INFICON (refer to section 1.3).

PN 074-156O

## *1.4.1 Single Sensor Configuration Overview and Parts*

Front Load Single Sensor (China) . . . . . SL-XXXXX-CN

*Figure 1-2 Front Load Single Sensor configurations*

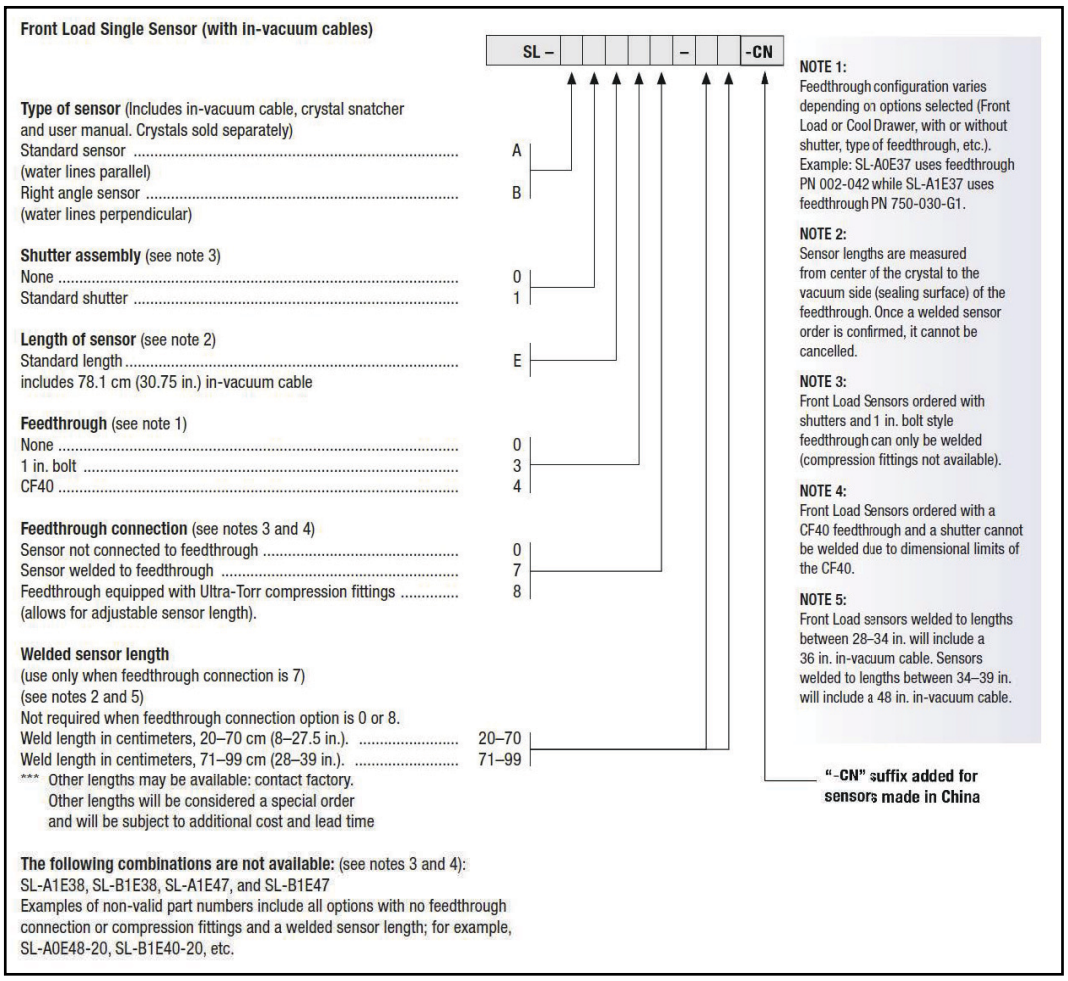


Crystal Snatcher. . . . . PN 008-007

78.1 cm (30.75 in.) In-Vacuum Cable. . . . . PN 007-044
(standard length)

152.4 cm (60 in.) In-Vacuum Cable . . . . . PN 321-039-G13
(extended length)

Tube Bender Kit . . . . . PN 750-037-G1
(provided only with non-welded sensors)

PN 074-156O

## 1.4.2 Dual Sensor Configuration Overview and Parts

Front Load Dual Sensor (China) . . . . . DL-AXXX-CN

*Figure 1-3 Front Load Dual Sensor configurations*

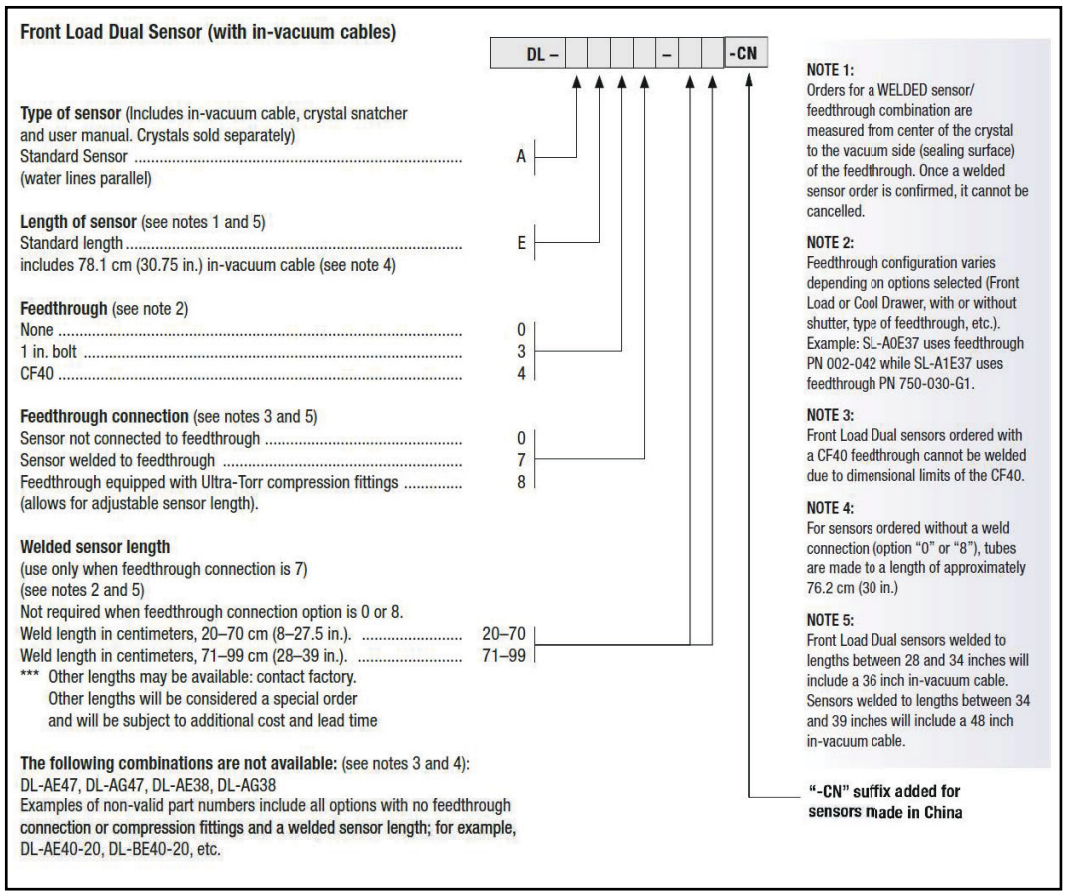


Crystal Snatcher . . . . . PN 008-007

78.1 cm (30.75 in.) In-Vacuum Cable . . . . . PN 007-044
(standard length)

152.4 cm (60 in.) In-Vacuum Cable . . . . . PN 321-039-G13
(extended length)

Tube Bender Kit . . . . . PN 750-037-G1
(provided only with non-welded sensors)

## 1.5 Front Load Single Sensors (PN SL-XXXXX-CN)

*Figure 1-4 Standard sensor*

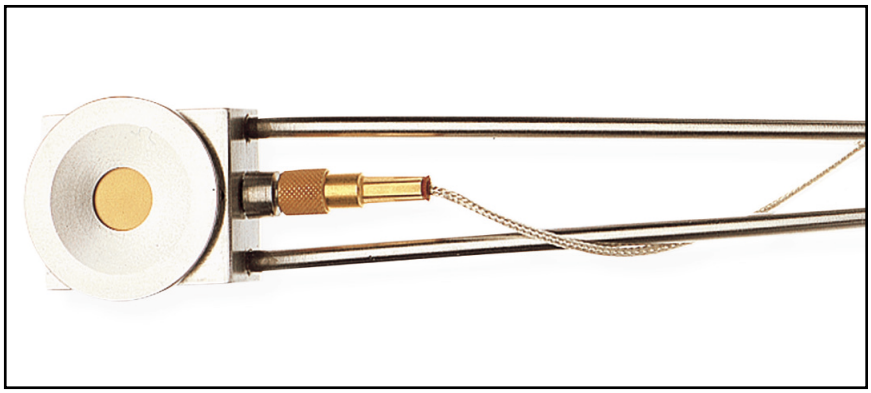

*Figure 1-5 Right angle (compact) sensor*

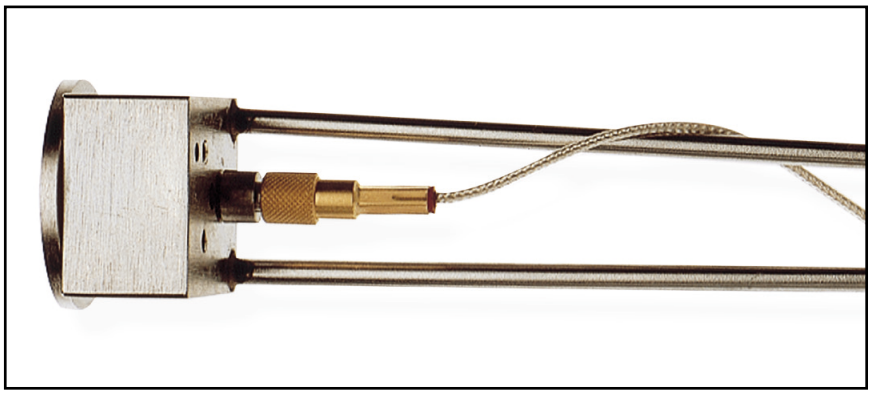

PN 074-156O

## 1.5.1 Specifications

| | |
|---|---|
| Maximum bakeout temperature with no water | 130°C |
| Maximum operating isothermal environment temperature with minimum water flow | 400°C |
| Maximum sensor body envelope without shutter | **Standard Sensor**<br>27.00 x 61.47 x 17.53 mm<br>(1.06 x 2.42 x 0.69 in.)<br>See Figure 1-6 on page 1-10.<br>**Right Angle Sensor**<br>28.19 x 26.92 x 26.92 mm<br>(1.11 x 1.06 x 1.06 in.)<br>See Figure 1-8 on page 1-12. |
| Water tube and in-vacuum cable length | **Standard Length (E)**<br>76.2 cm (30 in.) tubes,<br>3.175 mm (1/8 in.) OD seamless stainless steel, 0.406 mm (0.016 in.) wall thickness.<br>Includes 78.1 cm (30.75 in.) in-vacuum cable.<br>**Extended Length (G)**<br>121.9 cm (48 in.) tubes,<br>3.175 mm (1/8 in.) OD seamless stainless steel, 0.406 mm (0.016 in.) wall thickness.<br>Includes 152.4 cm (60 in.) in-vacuum cable. |
| Crystal exchange | Front-loading, self-contained package for ease of exchange |
| Mounting | Two #4-40 tapped holes on the back of the sensor body |
| Crystal size | 14 mm (0.550 in.) diameter |

PN 074-156O

### 1.5.2 Materials

| | |
|---|---|
| Body and Holder | 304 stainless steel |
| Springs, Electrical Contacts | Au plated Be-Cu |
| Water Tubes | 304 stainless steel |
| In-Vacuum Cable | Silver coated copper, Teflon® insulated |
| Electrical Connector | Glass insulated |
| Insulators | >99% $Al_2O_3$ |
| Braze | Vacuum process high temperature Ni-Cr alloy |

### 1.5.3 Installation Requirements

| | |
|---|---|
| Feedthrough | **Without Shutter**<br>Two pass water 4.8 mm (3/16 in.) OD tubing with Microdot® coax connector (see section 1.8.3 on page 1-25) |
| | **With Shutter**<br>Three pass tubes (two water and one air) 4.8 mm (3/16 in.) OD tubing with Microdot coax connector (see section 1.8.3 on page 1-25) |
| | Vacuum tight braze or weld joint or connectors for the water tubes (welded connections or connections using Ultra-Torr® O-ring compression fittings may be provided by INFICON if sensor/feedthrough combination is ordered, see Figure 1-2 on page 1-4) |
| Other | XIU or oscillator to match specific controller/monitor |
| | The cable length from the crystal to the oscillator should not exceed 101.6 cm (40 in.) unless a ModeLock instrument is used. Refer to the controller/monitor operating manual for cable length limitations. |
| | SL-X1XXX-CN only: Solenoid Valve for air, PN 750-420-G1 (see section 3.1 on page 3-1) |
| Water Flow Rate | Minimum water flow 150 to 200 $cm^3$/min, 30°C maximum |

PN 074-156O

Water Quality . . . . . Coolant should not contain chlorides as stress corrosion cracking may occur. Extremely dirty water may result in loss of cooling capacity.

**CAUTION**

**Do not allow water tubes to freeze. This may happen if the tubes pass through a cryogenic shroud and the flow of fluid is interrupted.**

Air (SL-X1XXX and SL-X1XXX-CN only) . . . . . 70 psi (gauge) {85 psi (absolute)} (5.8 bar (absolute)) [584 kPa (absolute)] (minimum)

80 psi (gauge) {95 psi (absolute)} (6.5 bar (absolute)) [653 kPa (absolute)] (maximum)

**WARNING**

**Do not exceed 100 psi (gauge) {115 psi (absolute)} (7.9 bar (absolute)) [791 kPa (absolute)].**

**Connection to excessive pressure may result in personal injury or equipment damage.**

### *1.5.4 Single Sensor Drawings*

The following Single Sensor Outline and Assembly Drawings provide dimensions and other relevant data necessary for planning equipment configurations.

Figure 1-6 . . . . . Standard Crystal Sensor Outline

Figure 1-7 . . . . . Standard Crystal Sensor Assembly (PN 750-211-GX)

Figure 1-8 . . . . . Right Angle Crystal Sensor Outline

Figure 1-9 . . . . . Right Angle Crystal Sensor Assembly (PN 750-213-GX)

PN 074-156O

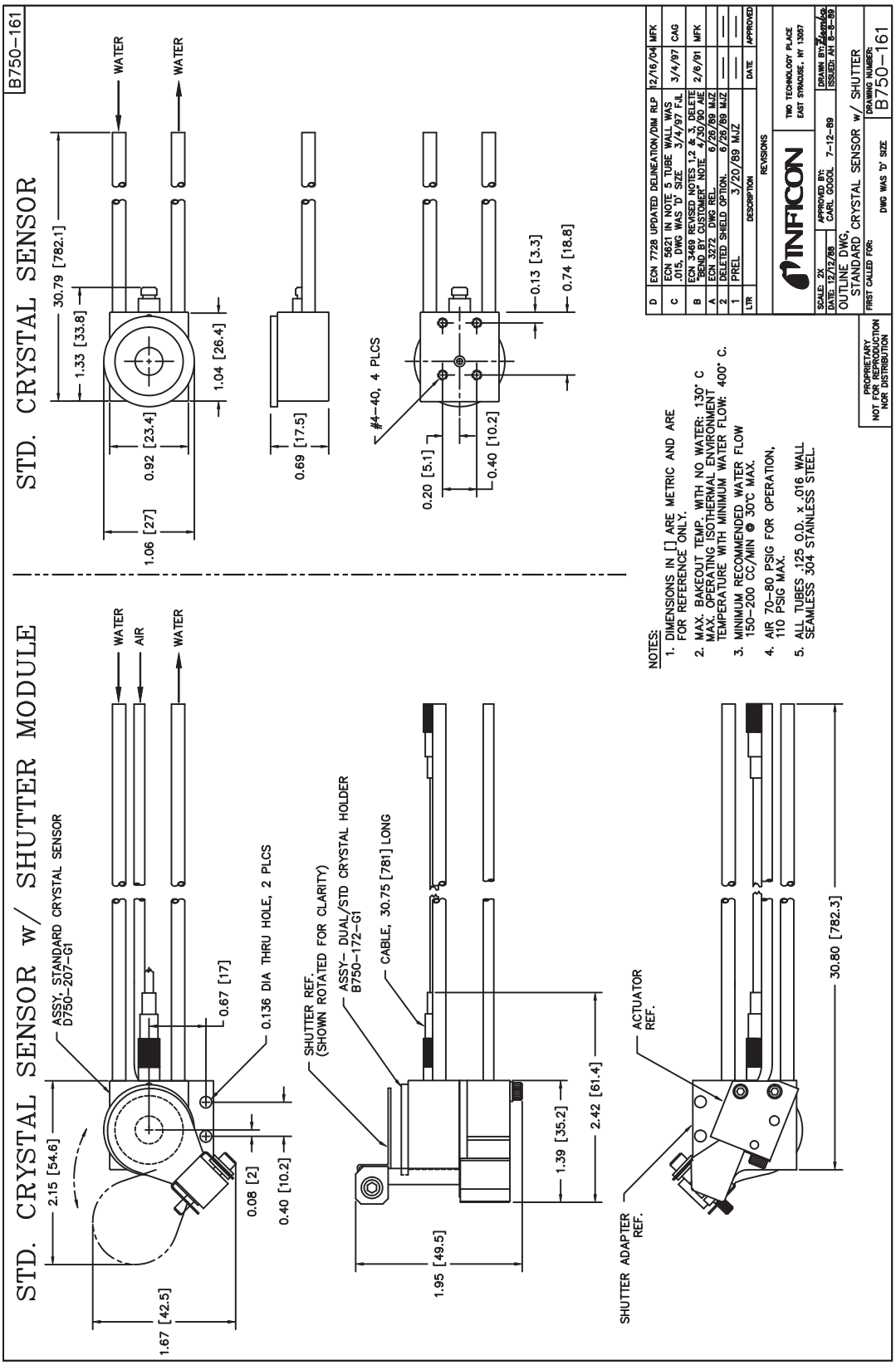


*Figure 1-6 Standard crystal sensor outline*

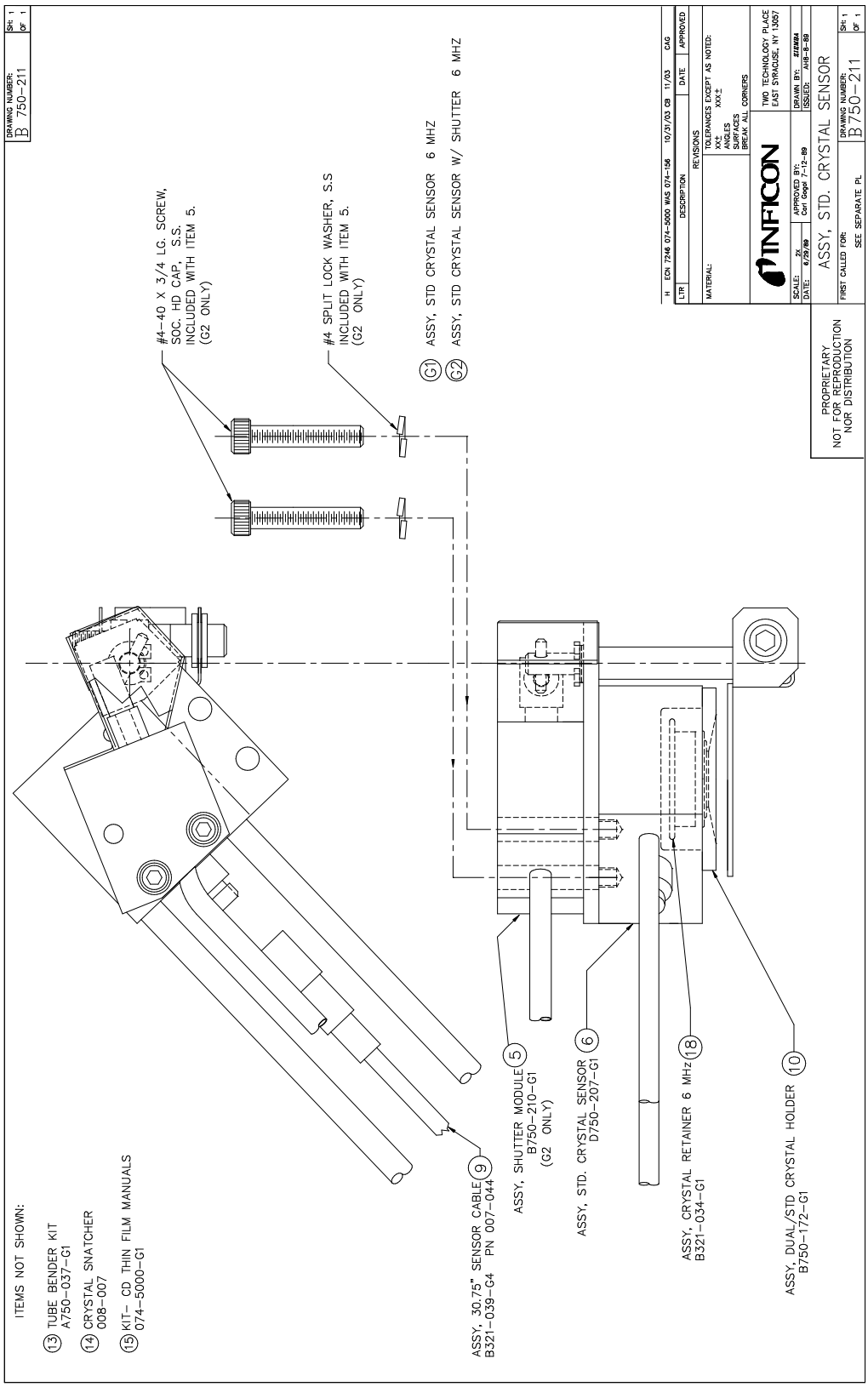


*Figure 1-7 PN 750-211-GX standard crystal sensor assembly*

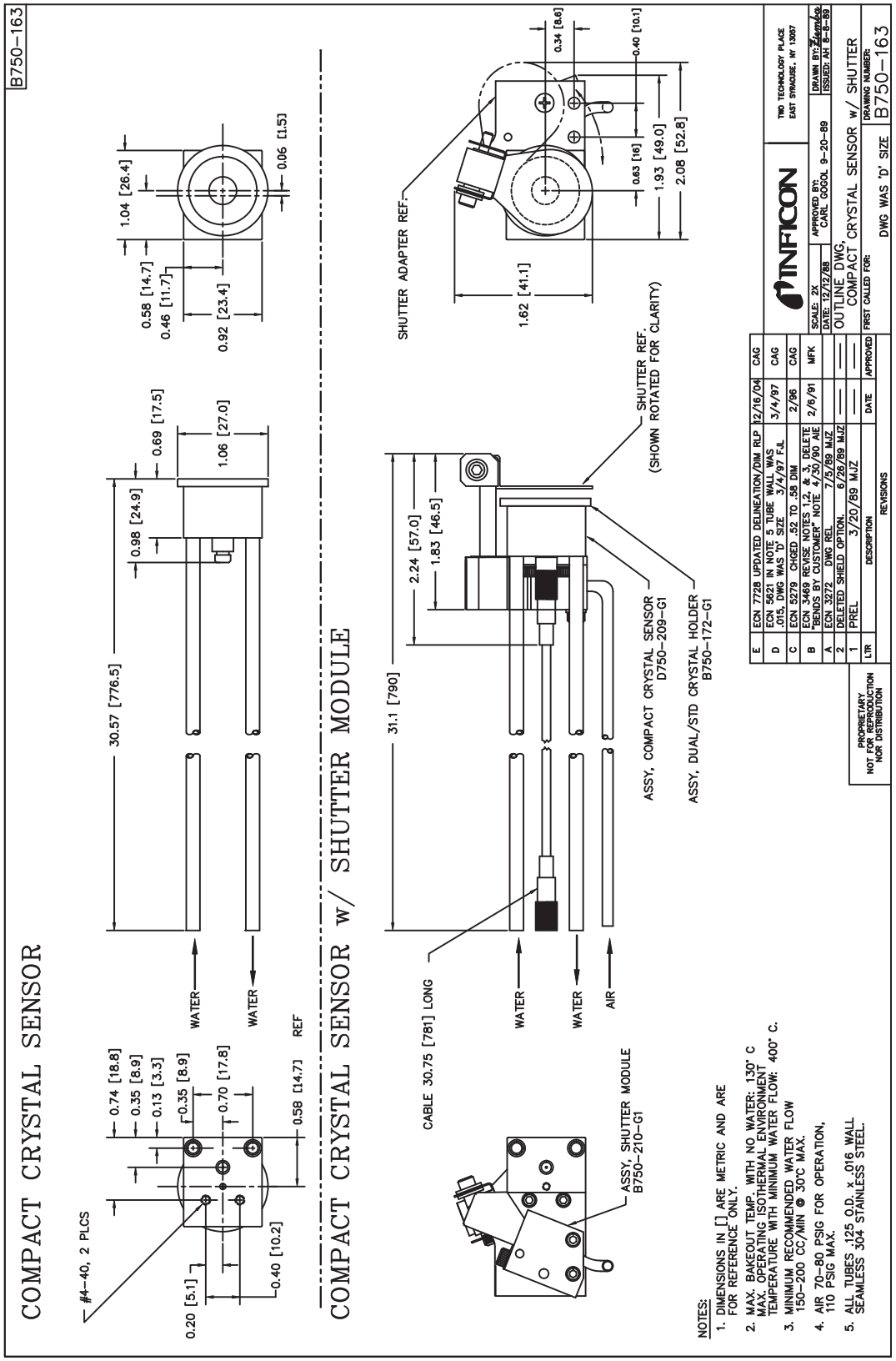


*Figure 1-8 Right angle crystal sensor outline*

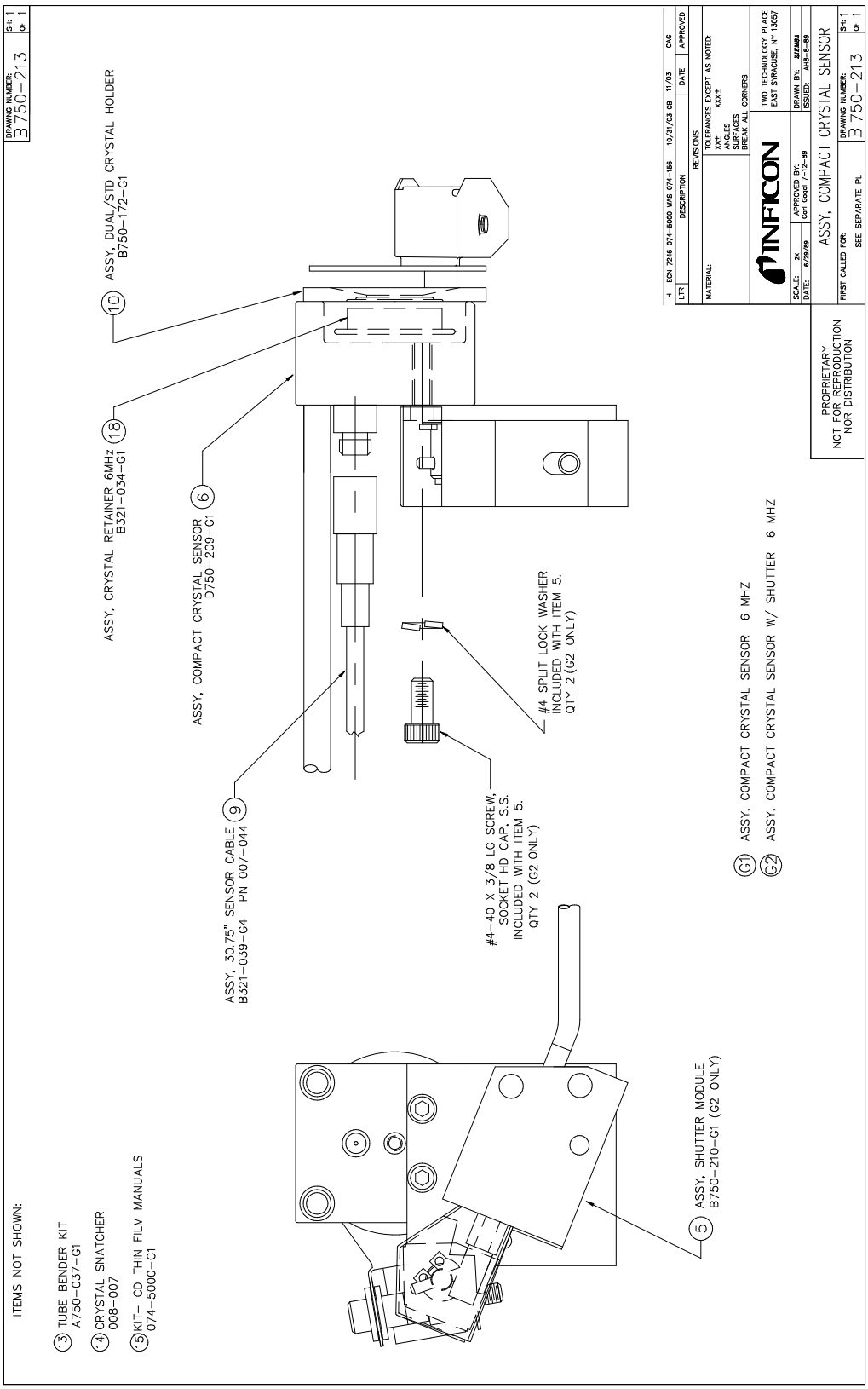


*Figure 1-9 PN 750-213-GX right angle crystal sensor assembly*

# 1.6 Front Load Dual Sensor (PN DL-AXXX-CN)

*Figure 1-10 Front Load Dual Sensor*

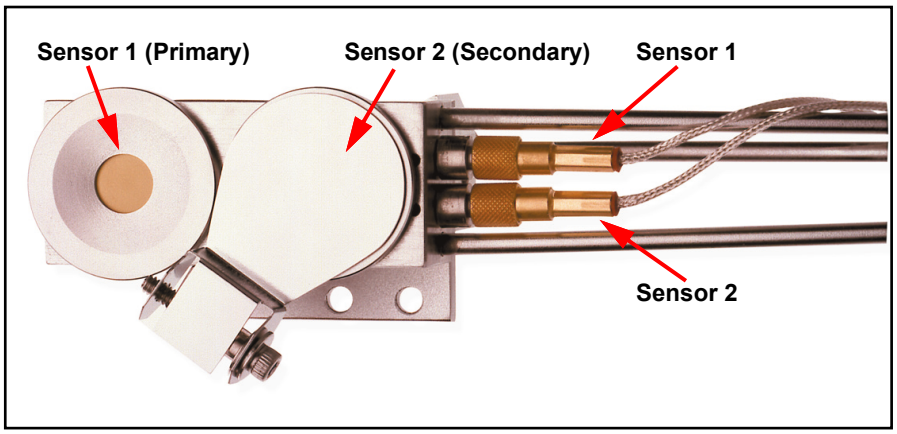


## 1.6.1 Specifications

Maximum bakeout temperature with no water . . . . . 130°C

Maximum operating isothermal environment temperature with minimum water flow . . . . . 400°C

Maximum sensor body envelope . . . . . 39.12 x 82.04 x 49.54 mm (1.54 x 3.23 x 1.95 in.)

Water tube and in-vacuum cable length . . . . . **Standard Length (E)**
76.2 cm (30 in.) tubes, 3.175 mm (1/8 in.) OD seamless stainless steel, 0.406 mm (0.016 in.) wall thickness.

Includes 78.1 cm (30.75 in.) in-vacuum cable.

**Extended Length (G)**
121.9 cm (48 in.) tubes, 3.175 mm (1/8 in.) OD seamless stainless steel, 0.406 mm (0.016 in.) wall thickness.

Includes 152.4 cm (60 in.) in-vacuum cable.

Crystal exchange . . . . . Front-loading, self-contained package for ease of exchange. Shutter flips up to ease access to the holders.

Mounting . . . . . Three #4-40 tapped holes

Crystal size. . . . . 14 mm (0.550 in.) diameter

PN 074-156O

### 1.6.2 Materials

| | |
|---|---|
| Body and Holder | 304 stainless steel |
| Springs, Electrical Contacts | Au plated Be-Cu |
| Water Tubes and Air Tube | 304 stainless steel |
| In-Vacuum Cable | Silver coated copper, Teflon insulated |
| Electrical Connector | Glass insulated |
| Insulators | >99% $Al_2O_3$ |
| Other Mechanical Parts | 304 or 18-8 stainless steel |
| Braze | Vacuum process high temperature Ni-Cr alloy |

### 1.6.3 Installation Requirements

| | |
|---|---|
| Feedthrough | Three pass tubes (two water and one air) 4.8 mm (3/16 in.) OD tubing with two Microdot coax connectors (see section 1.8.3 on page 1-25) |
| | Vacuum tight braze or weld joint or connectors for the water tubes (welded connections or connections using Ultra-Torr® O-ring compression fittings may be provided by INFICON if sensor/feedthrough combination is ordered, see Figure 1-3 on page 1-5) |
| Other | Two XIUs or oscillators designed to interface with the deposition controller or one XIU or oscillator and one CrystalTwo switch (not compatible with all controllers/monitors) |
| | The cable length from the crystal to the oscillator should not exceed 101.6 cm (40 in.) unless a ModeLock instrument is used. Refer to the controller/monitor operating manual for cable length limitations. |
| | Solenoid valve assembly for air, PN 750-420-G1 (see section 3.1 on page 3-1) |
| Water Flow Rate | Minimum water flow 150 to 200 $cm^3$/min, 30°C maximum |

PN 074-156O

Water Quality . . . . . Coolant should not contain chlorides as stress corrosion cracking may occur. Extremely dirty water may result in loss of cooling capacity.

**CAUTION**

**Do not allow water tubes to freeze. This may happen if the tubes pass through a cryogenic shroud and the flow of fluid is interrupted.**

Air Pressure . . . . . 70 psi (gauge) {85 psi (absolute)} (5.8 bar (absolute)) [584 kPa (absolute)] (minimum)

80 psi (gauge) {95 psi (absolute)} (6.5 bar (absolute)) [653 kPa (absolute)] (maximum)

**WARNING**

**Do not exceed 100 psi (gauge) {115 psi (absolute)} (7.9 bar (absolute)] [791 kPa (absolute)].**

**Connection to excessive pressure may result in personal injury or equipment damage.**

### *1.6.4 Dual Sensor Drawings*

The following Dual Sensor Outline and Assembly Drawings provide dimensions and other relevant data necessary for planning equipment configurations.

Figure 1-11. . . . . Dual Crystal Sensor Outline

Figure 1-12. . . . . Dual Crystal Sensor Assembly (PN 750-212-GX)

PN 074-156O

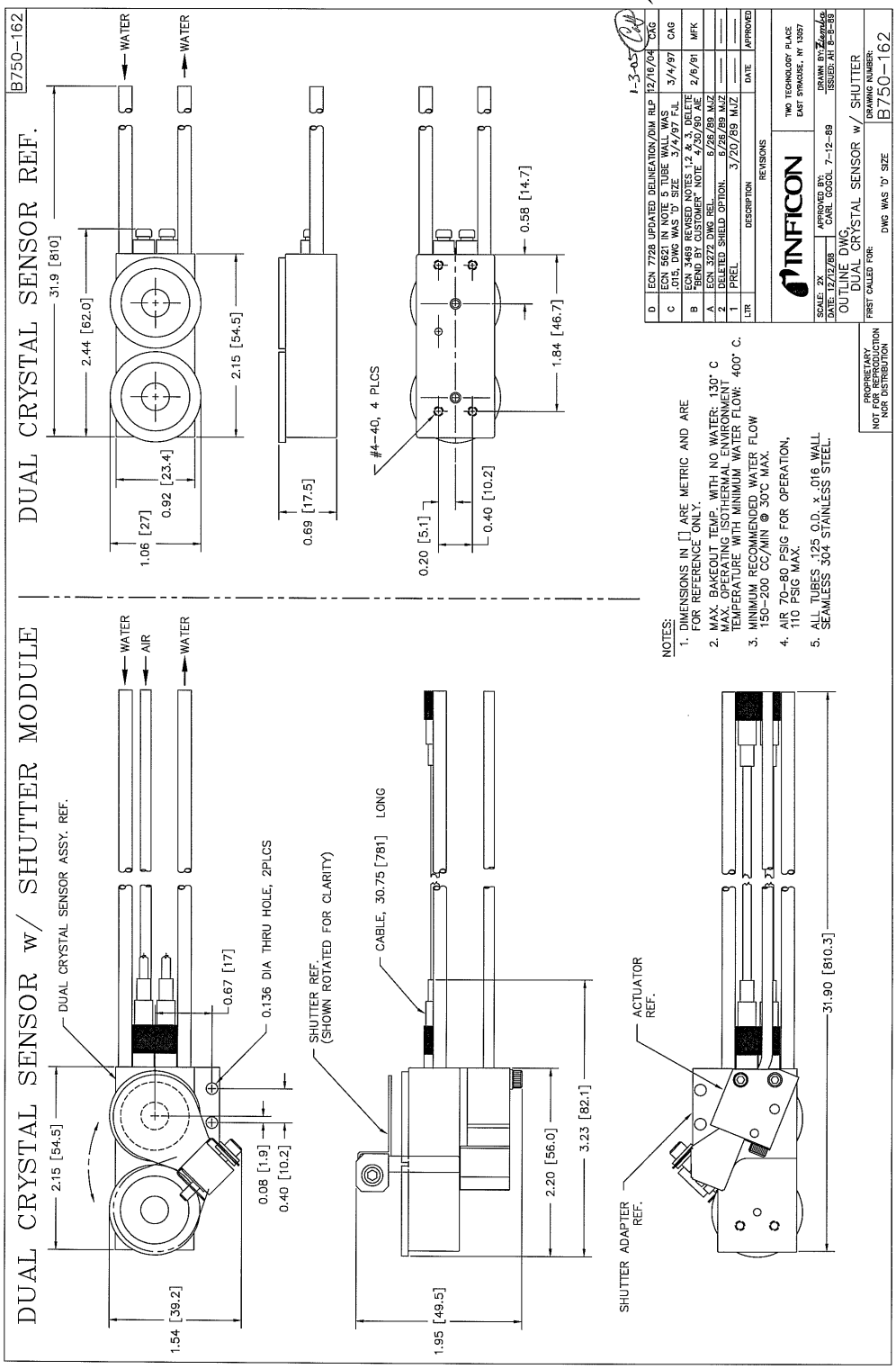


*Figure 1-11 Dual crystal sensor outline*

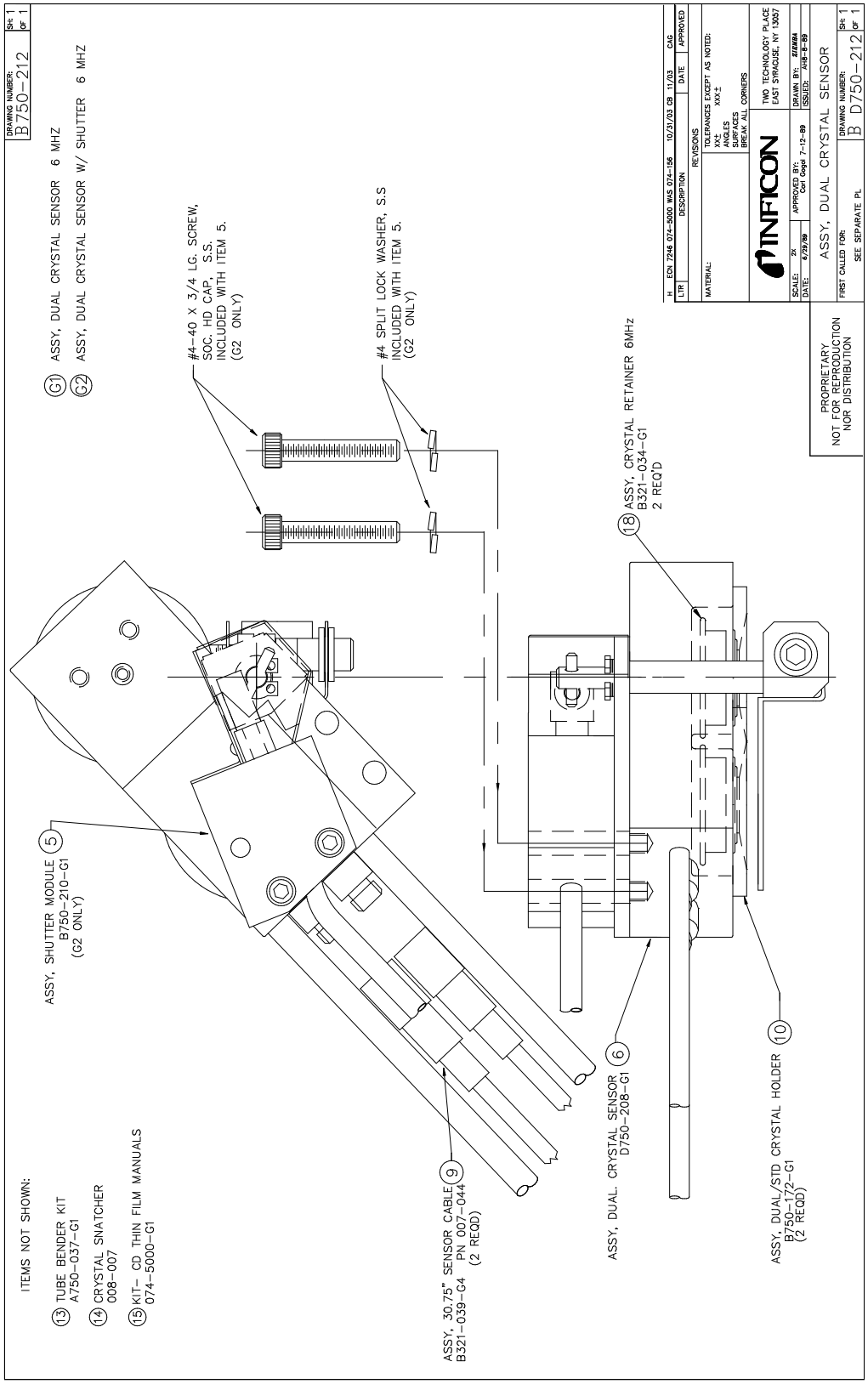


*Figure 1-12 PN 750-212-GX dual crystal sensor assembly*

# 1.7 Shutter Module (PN 750-210-G1 and 750-210-G3)

*Figure 1-13 Shutter module*

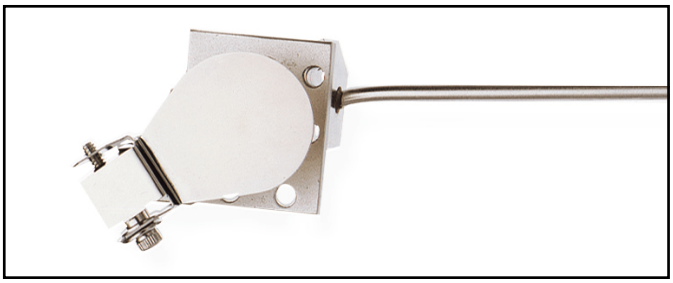

## 1.7.1 Specifications

| | |
|---|---|
| Maximum bakeout temperature with no water | 130°C |
| Maximum operating isothermal environment temperature, properly attached to a sensor with minimum water flow | 400°C |
| Air Tube | 304-SS, 3.175 mm (1/8 in.) OD seamless stainless steel, 0.406 mm (0.016 in.) wall thickness |
| PN 750-210-G1 | 76.2 cm (30 in.) air tube |
| PN 750-210-G3 | 121.9 cm (48 in.) air tube |
| Pressure | 70 psi (gauge) {85 psi (absolute)} (5.8 bar (absolute)) [584 kPa (absolute)] (minimum) |
| | 80 psi (gauge) {95 psi (absolute)} (6.5 bar (absolute)) [653 kPa (absolute)] (maximum) |

**WARNING**

**Do not exceed 100 psi (gauge) {115 psi (absolute)} (7.9 bar (absolute)) [791 kPa (absolute)]. Connection to excessive pressure may result in personal injury or equipment damage.**

| | |
|---|---|
| Materials | Stainless steel |
| Shutter | Pneumatically operated. Shutter swings aside for easy crystal exchange. |
| Braze | Vacuum process high temperature (BNi-2 and Ni-Cr alloy) |

PN 074-156O

### 1.7.2 Shutter Module Drawings

The following Shutter Module Assembly Drawings provide relevant data necessary for planning equipment configurations.

Figure 1-14 . . . . . PN 750-210-G1, 76.2 cm (30 in.) Shutter Module

Figure 1-15 . . . . . PN 750-210-G3, 121.9 cm (48 in.) Shutter Module

PN 074-156O

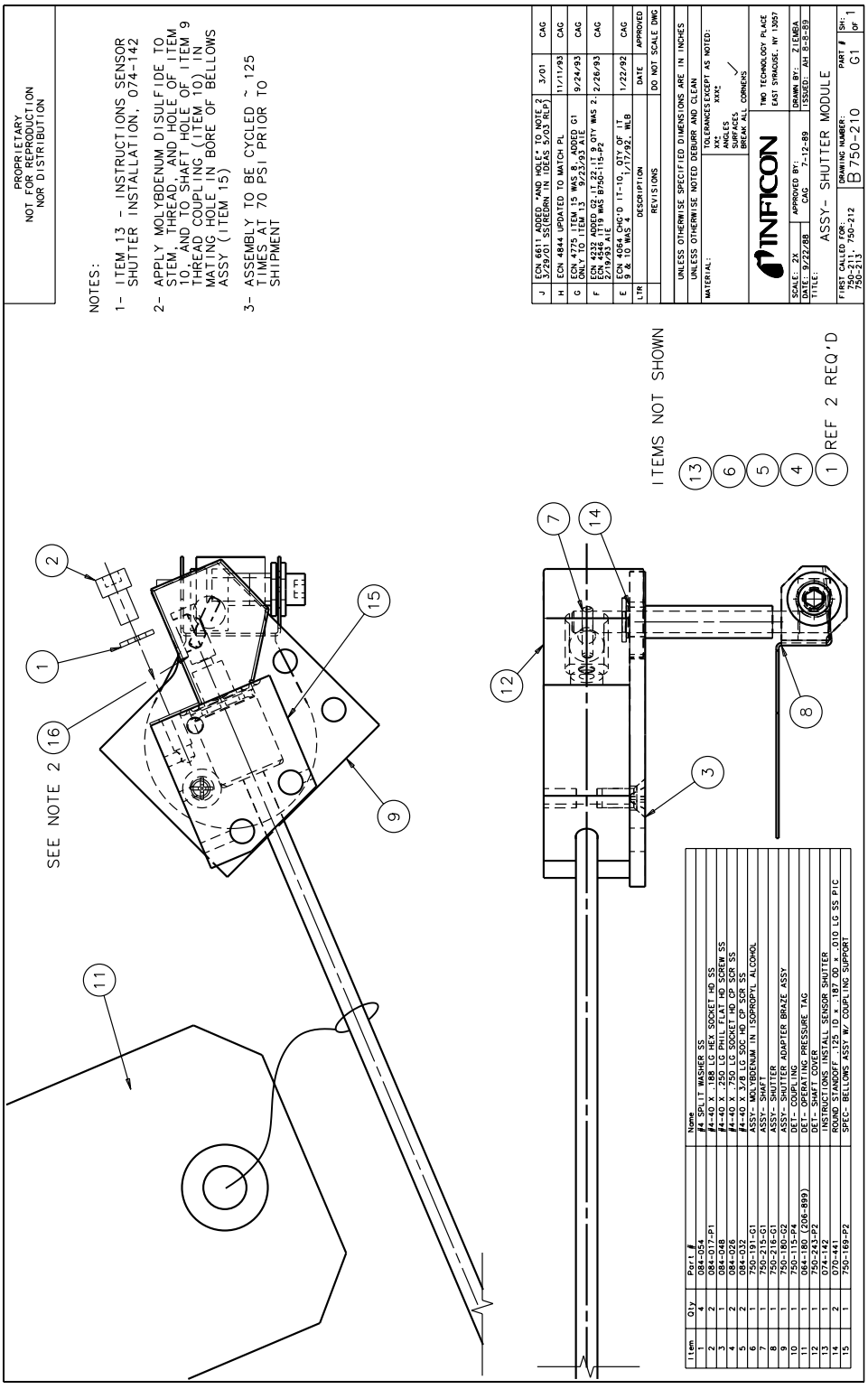


| Item | Qty | Part # | Name |
|---|---|---|---|
| 1 | 4 | 084-054 | #4 SPLIT WASHER SS |
| 2 | 2 | 084-017-P1 | #4-40 X .188 LG HEX SOCKET HD SS |
| 3 | 1 | 084-048 | #4-40 X .250 LG PHIL FLAT HD SCREW SS |
| 4 | 2 | 084-026 | #4-40 X .250 LG SOCKET HD SCR SS |
| 5 | 2 | 084-030 | #4-40 X .438 LG SOCKET HD SCR SS |
| 6 | 1 | 750-191-G1 | ASSY- MOLYBDENUM IN ISOPROPYL ALCOHOL |
| 7 | 1 | 750-215-G1 | ASSY- SHAFT |
| 8 | 1 | 750-216-G1 | ASSY- SHUTTER |
| 9 | 1 | 750-180-G2 | ASSY- SHUTTER ADAPTER BRAZE ASSY |
| 10 | 1 | 750-213-P4 | DET- COUPLING |
| 11 | 1 | 064-180 (206-899) | DET- OPERATING PRESSURE TAG |
| 12 | 1 | 750-243-P2 | DET- SHAFT COVER |
| 13 | 1 | 074-142 | INSTRUCTIONS INSTALL SENSOR SHUTTER |
| 14 | 2 | 070-441 | ROUND STANDOFF .125 ID x .187 OD x .010 LG SS PIC |
| 15 | 1 | 750-189-P2 | SPEC- BELLOWS ASSY W/ COUPLING SUPPORT |

*Figure 1-14 PN 750-210-G1, 76.2 cm (30 in.) shutter module*

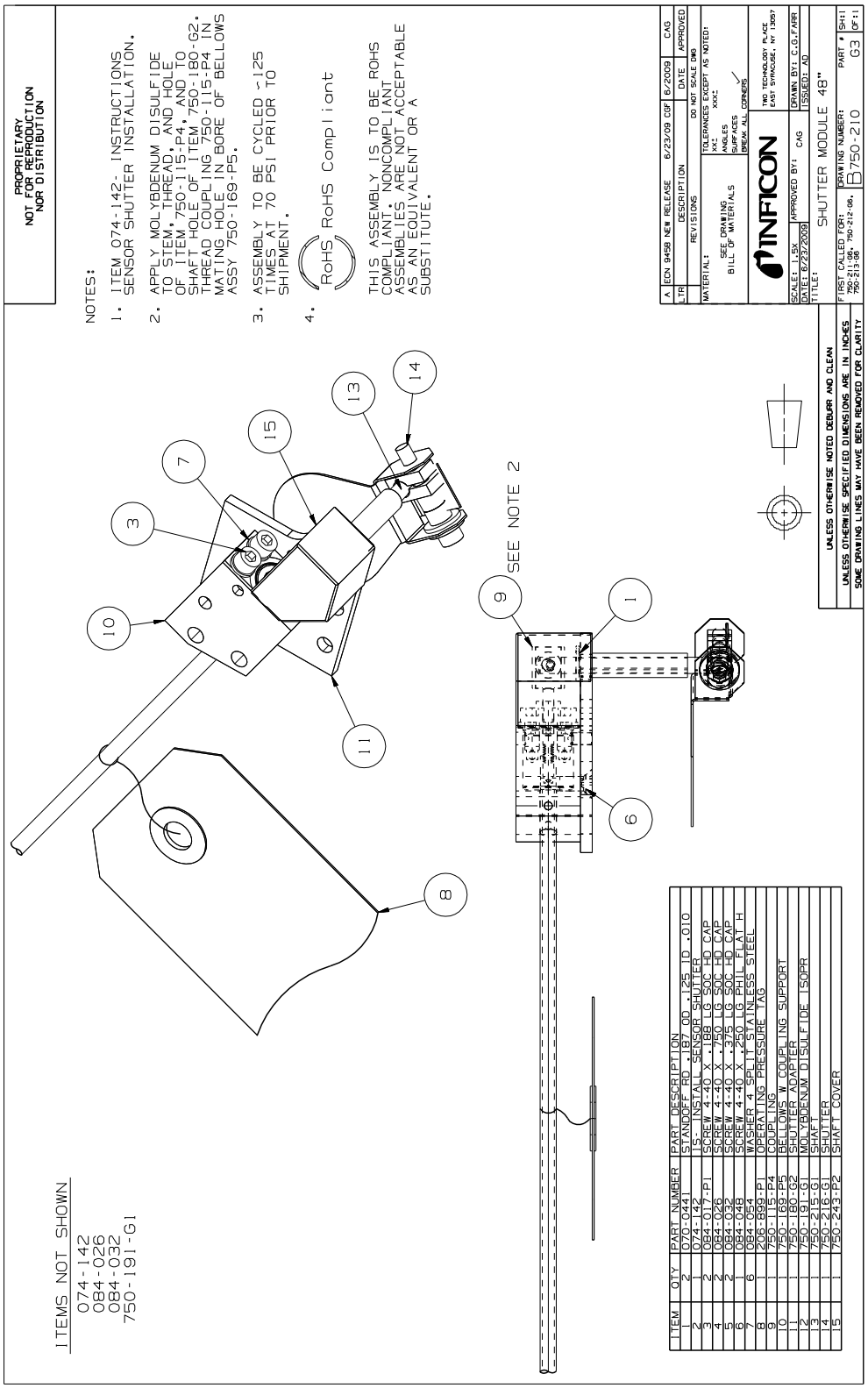


*Figure 1-15 PN 750-210-G3, 121.9 cm (48 in.) shutter module*

## 1.8 Feedthroughs

**NOTE:** Sensor/feedthrough combination temperature specifications are limited by lowest temperature specification of the component.

### 1.8.1 Specifications for 2.54 cm (1 in.) Bolt

Mounting . . . . . 25.781 mm (1.015 in.) ±0.254 mm (0.010 in.) diameter aperture

**Ultra-Torr O-ring compression fitting terminations**

Maximum operational environment temperature with no water . . . . . 165°C

Maximum operational environment temperature with minimum water flow . . . . . 300°C

Materials . . . . . 304 stainless steel, Teflon, glass, brass, beryllium copper, VITON®

**Welded terminations**

Maximum operational environment temperature with no water . . . . . 165°C

Maximum operational environment temperature with minimum water flow . . . . . 450°C

Materials . . . . . 304 stainless steel, Teflon, glass, brass, beryllium copper

PN 074-156O

## 1.8.2 Specifications for CF40 (2-3/4 in. ConFlat)

Mounting . . . . . Mates with 7 cm (2-3/4 in.) ConFlat® type flanges with 3.49 cm (1.375 in.) ID (minimum)

**Ultra-Torr O-ring compression fitting terminations**

Maximum operational environment temperature with no water . . . . . 165°C

Maximum operational environment temperature with minimum water flow . . . . . 300°C

Materials. . . . . 304 stainless steel, Teflon, glass, brass, beryllium copper, VITON®

**Welded terminations**

Maximum operational environment temperature with no water . . . . . 165°C

Maximum operational environment temperature with minimum water flow . . . . . 450°C

Materials. . . . . 304 stainless steel, Teflon, glass, brass, beryllium copper

PN 074-156O

### 1.8.3 Feedthrough Drawings

The following Feedthrough Outline Drawings provide dimensions and other pertinent data necessary for planning equipment configurations.

Figure 1-16 . . . . . 2.54 cm (1 in.) bolt feedthrough with two tubes, one coax (PN 002-042-CN)

Figure 1-17 . . . . . 2.54 cm (1 in.) bolt feedthrough with three tubes, one coax (PN 750-030-G1-CN)

Figure 1-18 . . . . . 2.54 cm (1 in.) bolt feedthrough with three tubes, two coax (PN 750-707-G1-CN)

Figure 1-19 . . . . . 2.54 cm (1 in.) bolt feedthrough with two tubes, 1 coax, with Ultra-Torr (PN 750-624-G1-CN)

Figure 1-20 . . . . . CF40 (2-3/4 in. ConFlat) feedthrough with two tubes, one coax (PN 002-043-CN)

Figure 1-21 . . . . . CF40 (2-3/4 in. ConFlat) feedthrough with three tubes, one coax (PN 750-685-G1-CN)

Figure 1-22 . . . . . CF40 (2-3/4 in. ConFlat) feedthrough with three tubes, two coax (PN 002-080-CN)

Figure 1-23 . . . . . CF40 (2-3/4 in. ConFlat) feedthrough with two tubes, one coax, with Ultra-Torr (PN 206-878-G2-CN)

Figure 1-24 . . . . . CF40 (2-3/4 in. ConFlat) feedthrough with three tubes, one coax, with Ultra-Torr (PN 750-685-G2-CN)

Figure 1-25 . . . . . CF40 (2-3/4 in. ConFlat) feedthrough with three tubes, two coax, with Ultra-Torr (PN 206-890-G2-CN)

PN 074-156O

*Figure 1-16 2.54 cm (1 in.) bolt feedthrough with two tubes, one coax (PN 002-042-CN)*

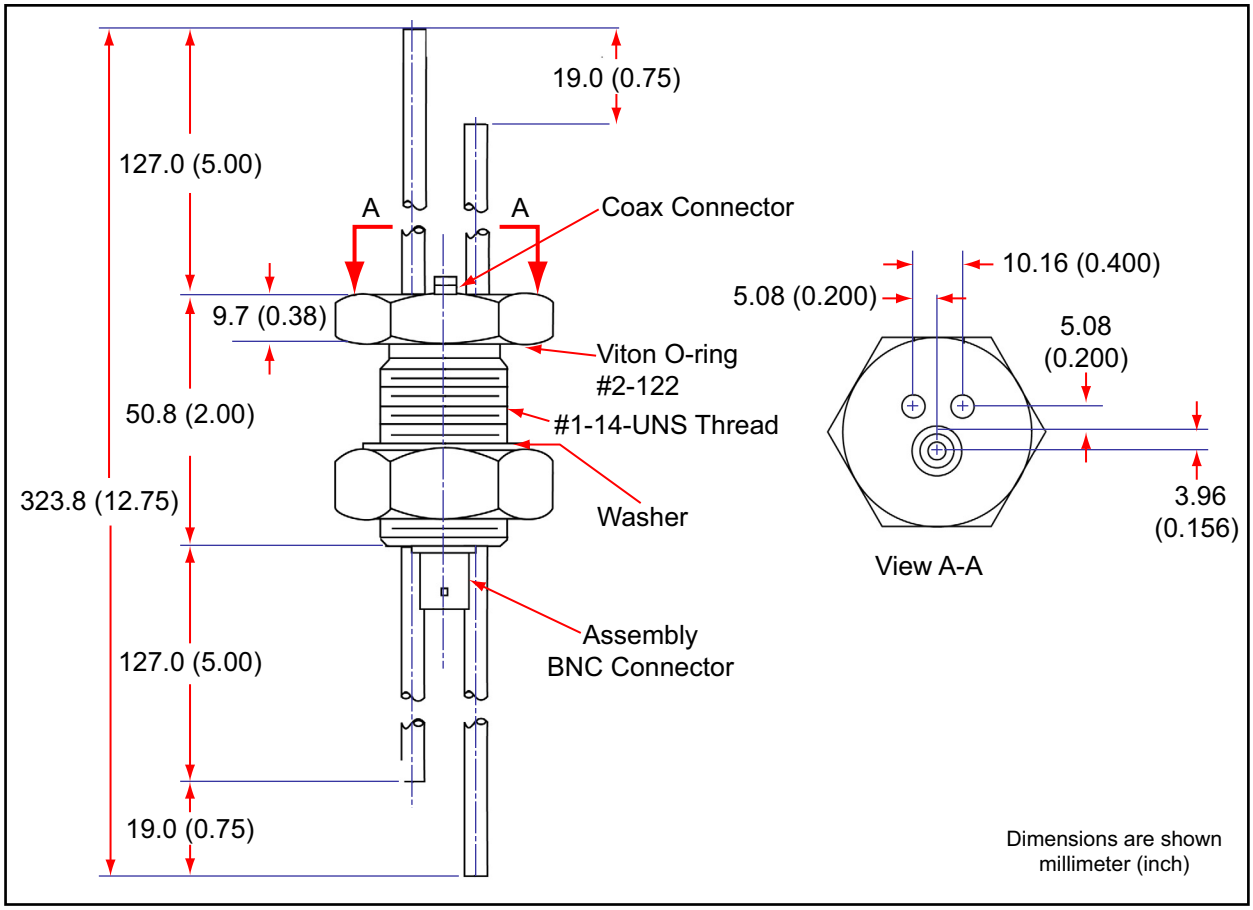


PN 074-156O

*Figure 1-17 2.54 cm (1 in.) bolt feedthrough with three tubes, one coax (PN 750-030-G1-CN)*

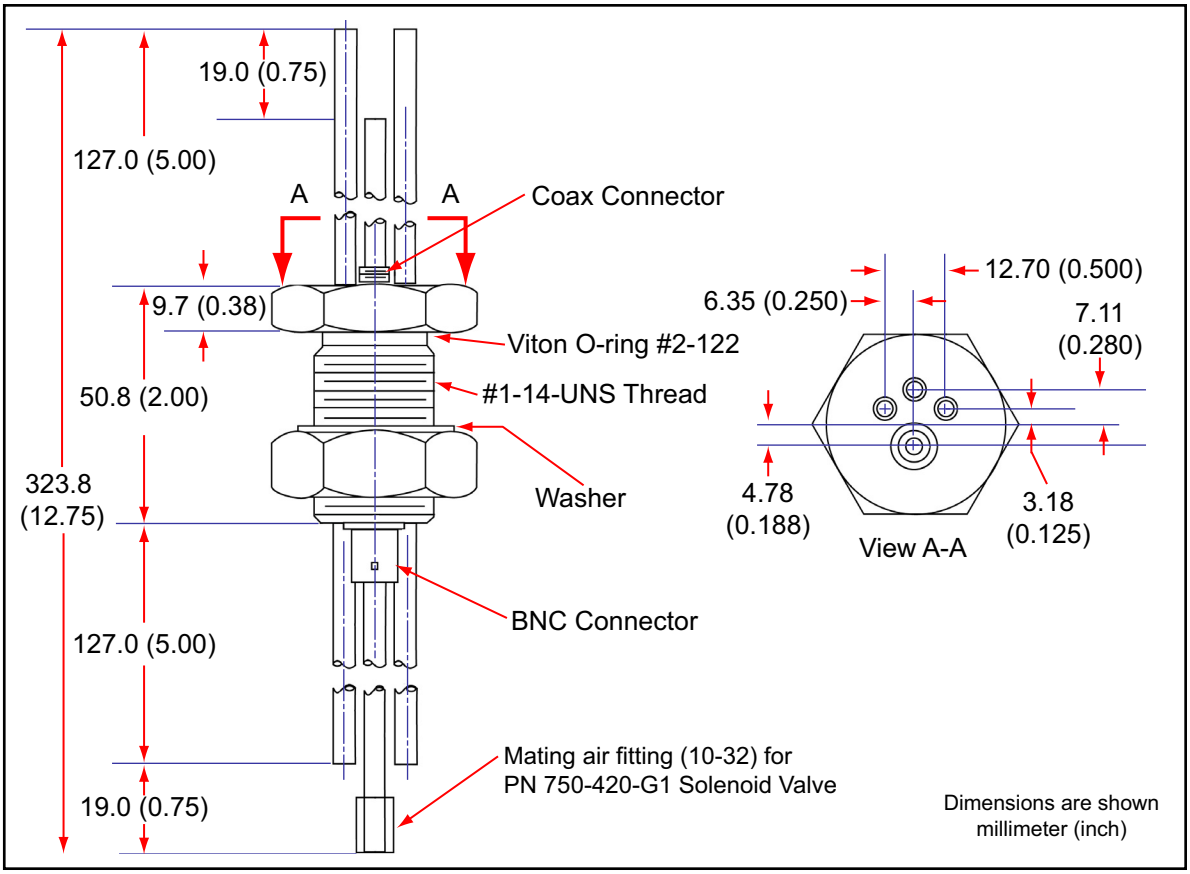

*Figure 1-18 2.54 cm (1 in.) bolt feedthrough with three tubes, two coax (PN 750-707-G1-CN)*

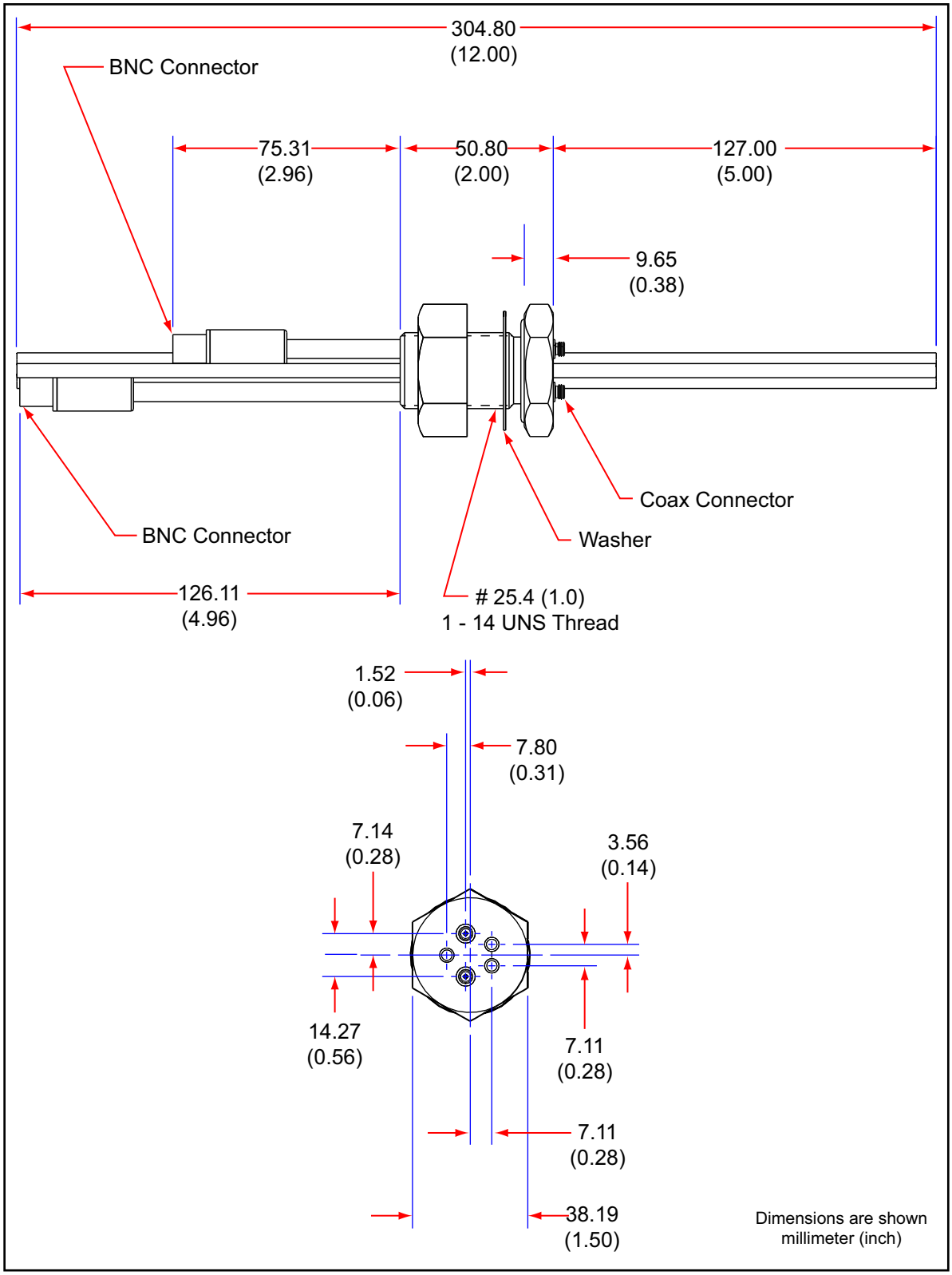


PN 074-156O

*Figure 1-19 2.54 cm (1 in.) bolt feedthrough with two tubes, one coax, with Ultra-Torr (PN 750-624-G1-CN)*

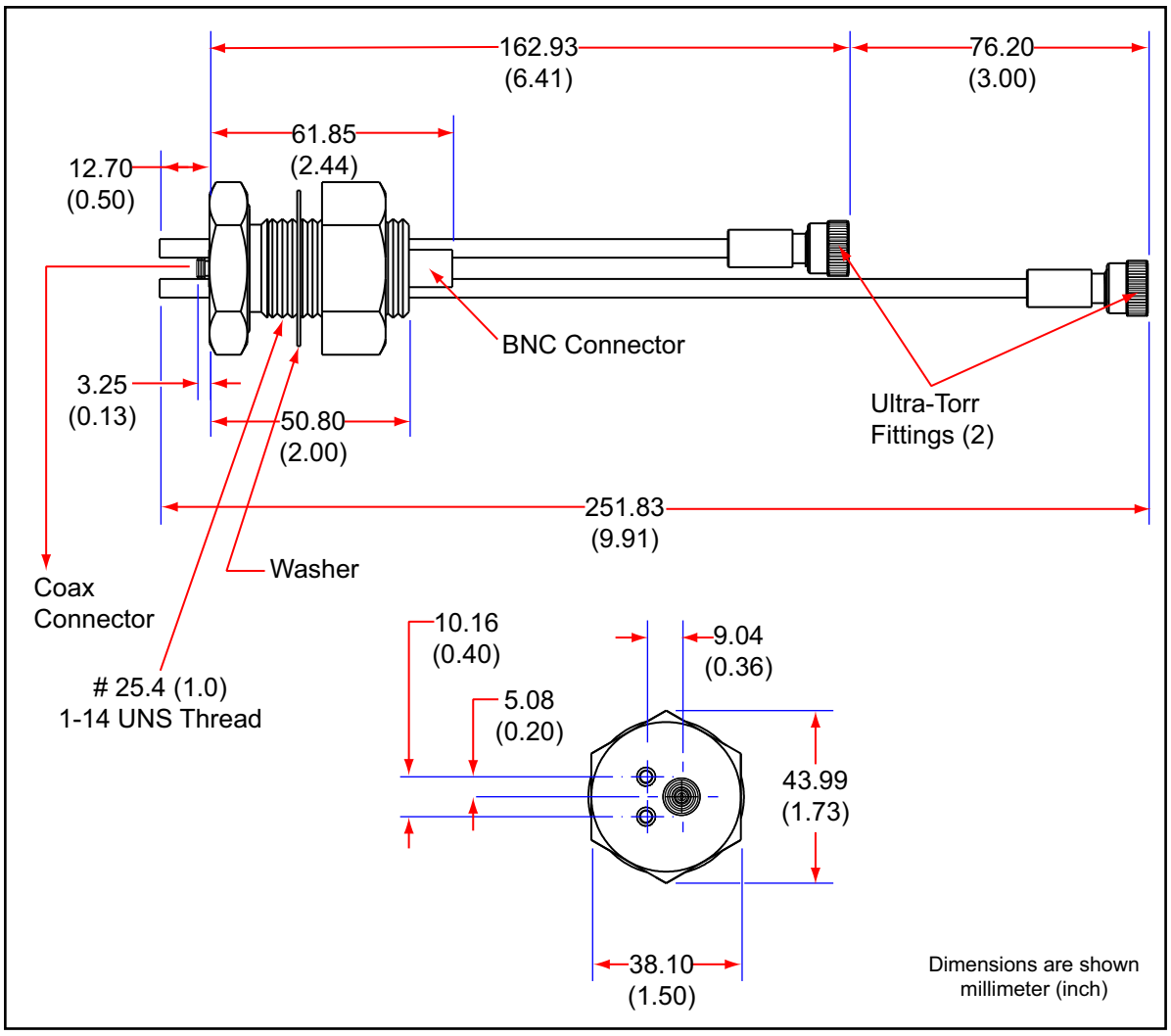


PN 074-156O

*Figure 1-20 CF40 (2-3/4 in. ConFlat) feedthrough with two tubes, one coax (PN 002-043-CN)*

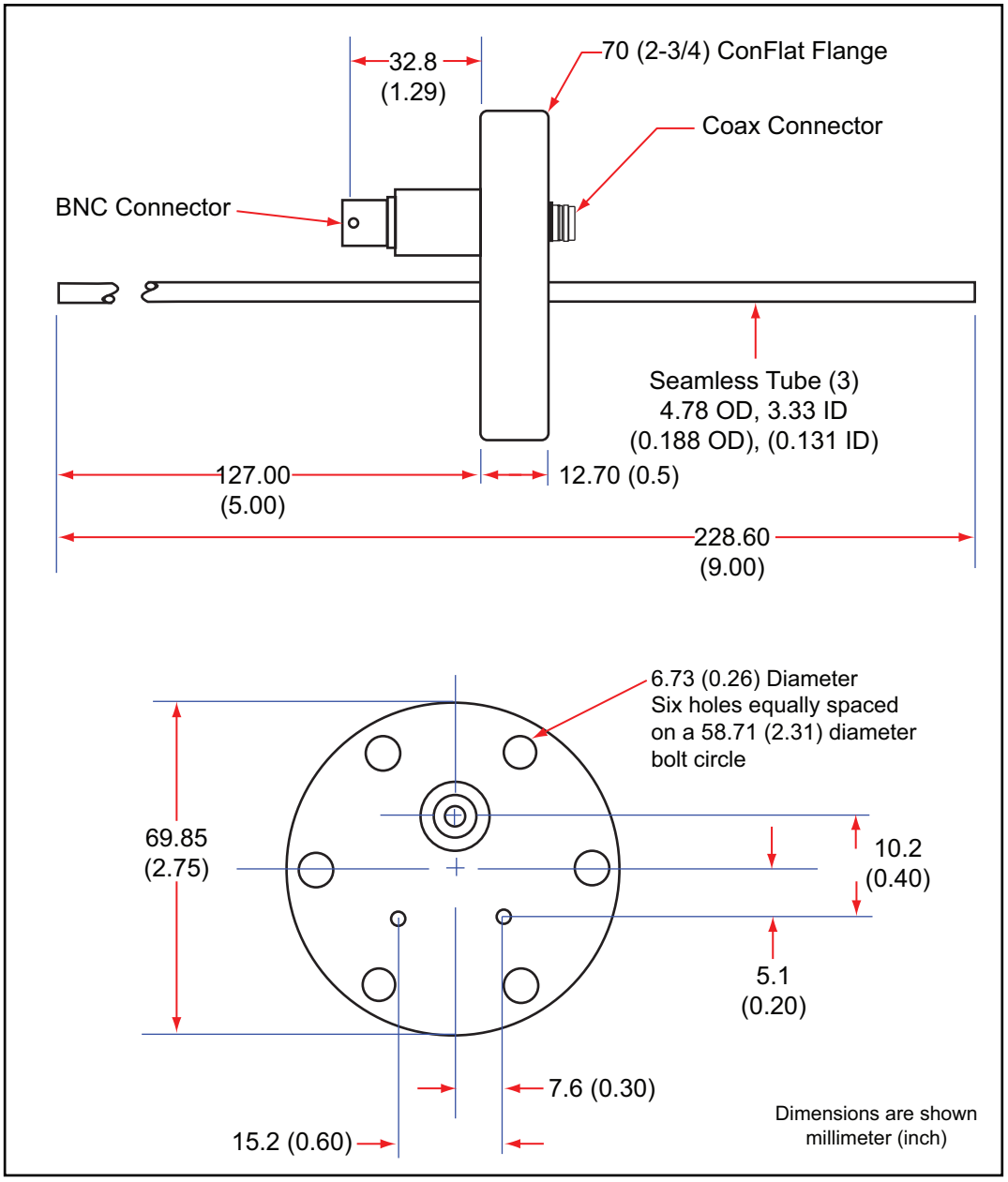


PN 074-156O

*Figure 1-21 CF40 (2-3/4 in. ConFlat) feedthrough with three tubes, one coax (PN 750-685-G1-CN)*

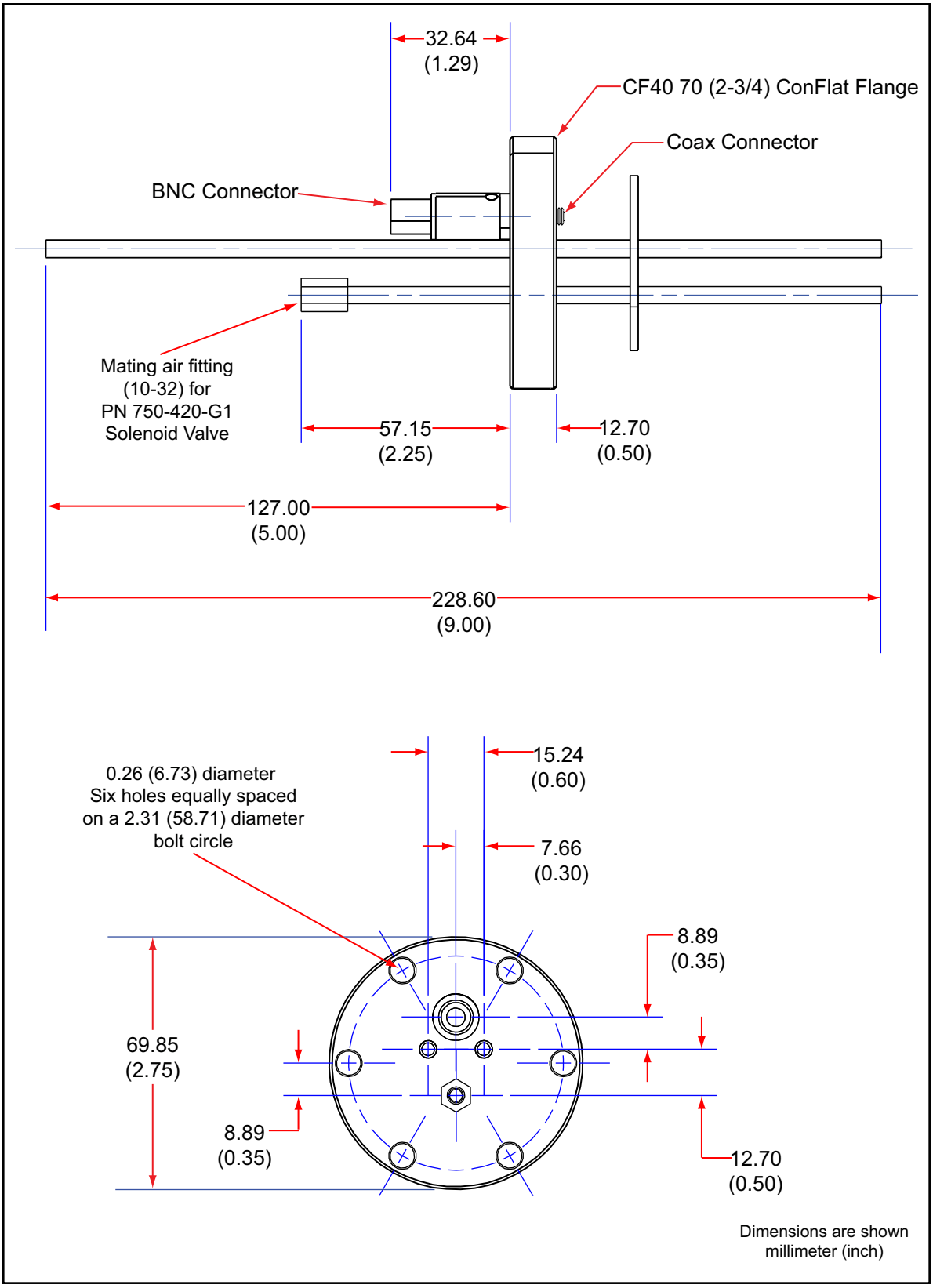


PN 074-156O

*Figure 1-22 CF40 (2-3/4 in. ConFlat) feedthrough with three tubes, two coax (PN 002-080-CN)*

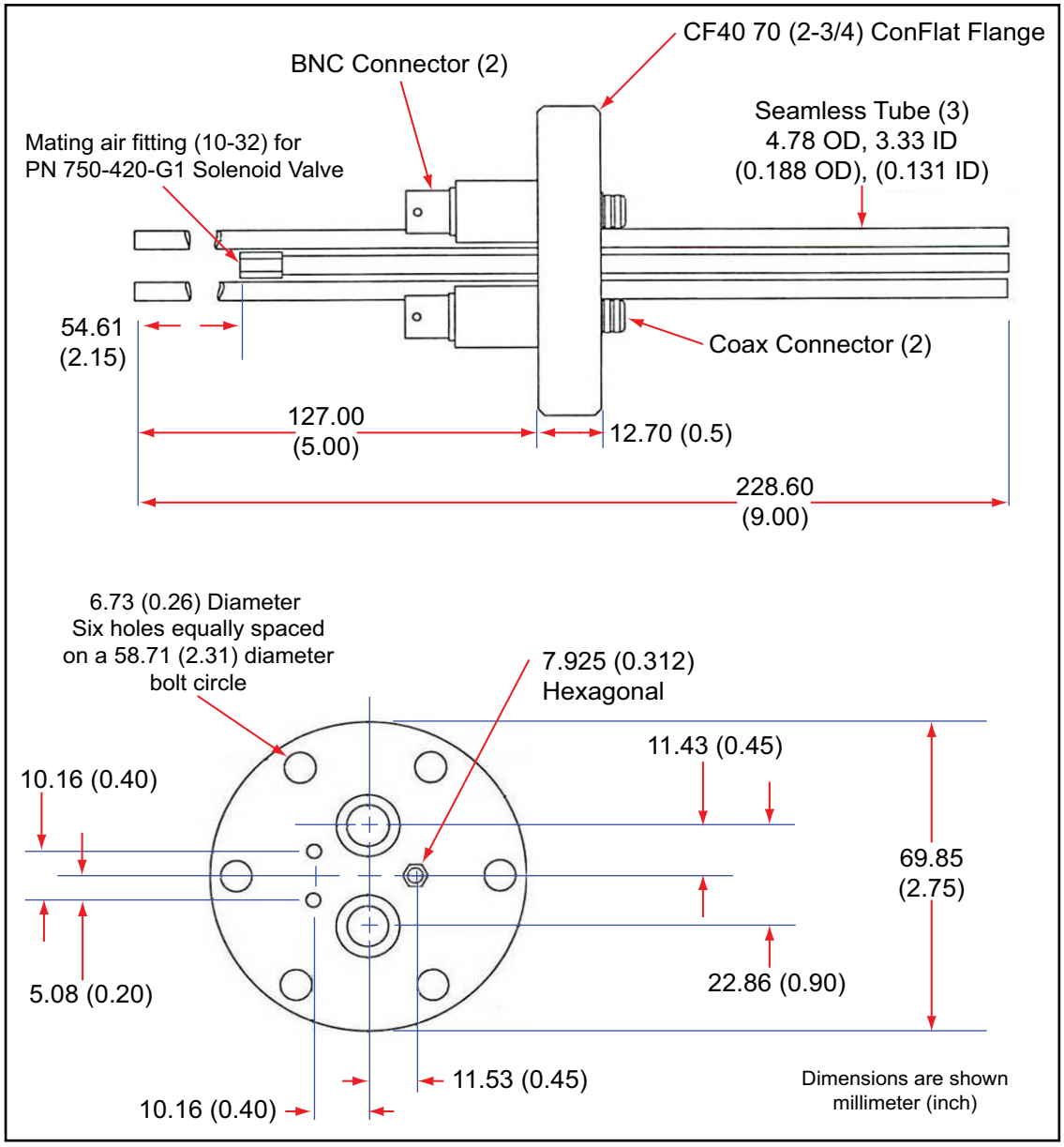


PN 074-156O

*Figure 1-23 CF40 (2-3/4 in. ConFlat) feedthrough with two tubes, one coax, with Ultra-Torr (PN 206-878-G2-CN)*

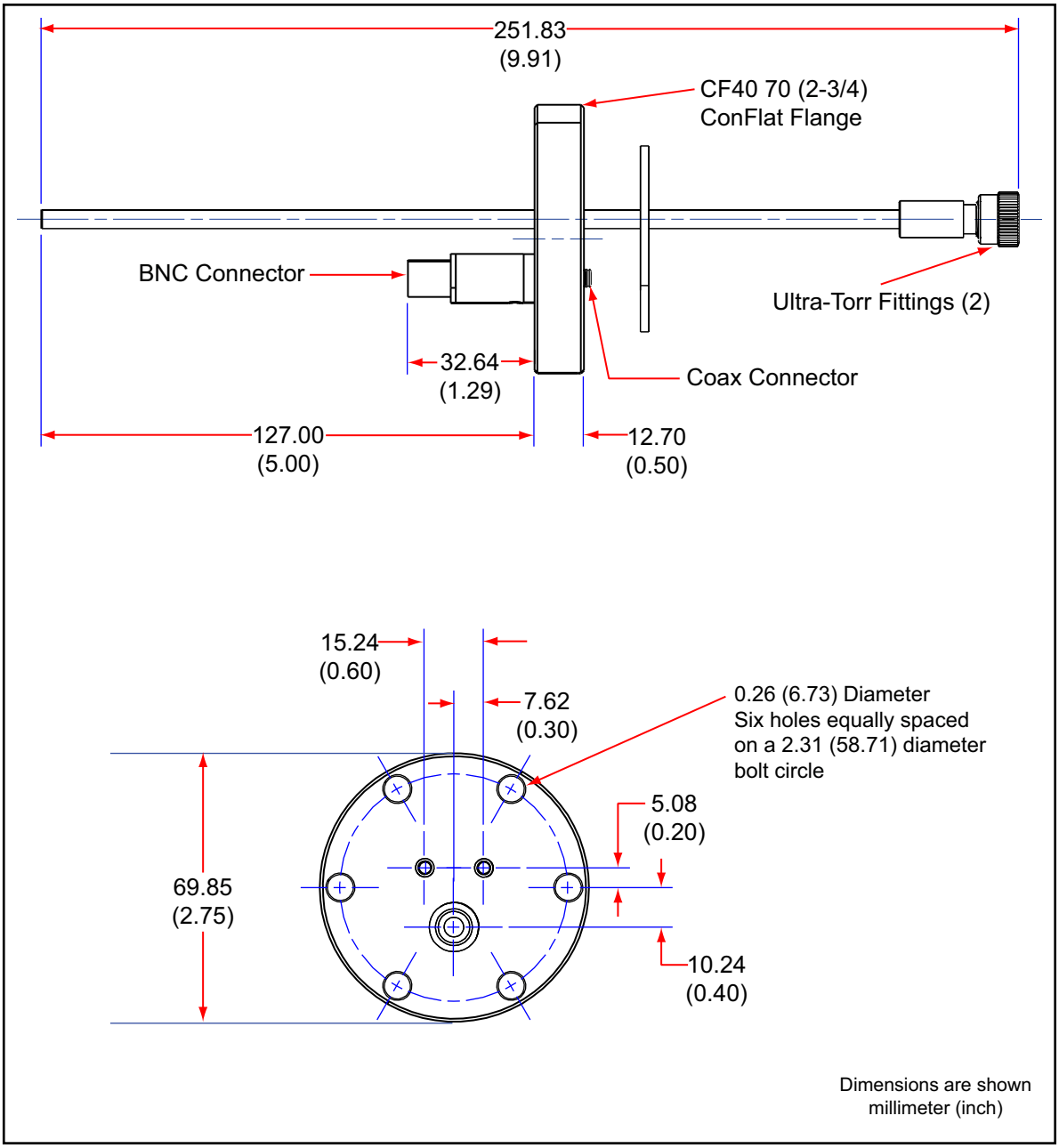


PN 074-156O

*Figure 1-24 CF40 (2-3/4 in. ConFlat) feedthrough with three tubes, one coax, with Ultra-Torr (PN 750-685-G2-CN)*

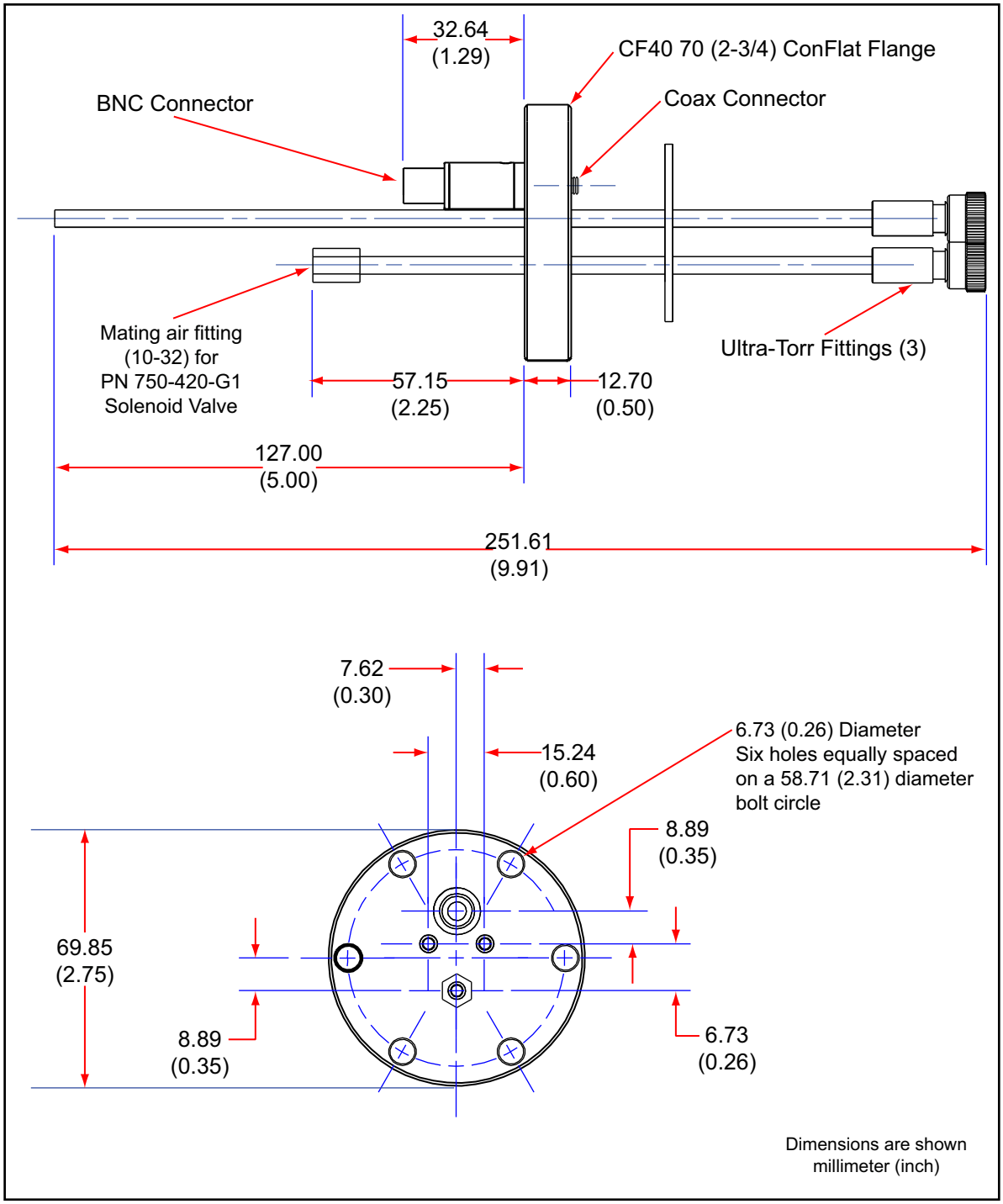


PN 074-156O

*Figure 1-25 CF40 (2-3/4 in. ConFlat) feedthrough with three tubes, two coax, with Ultra-Torr (PN 206-890-G2-CN)*

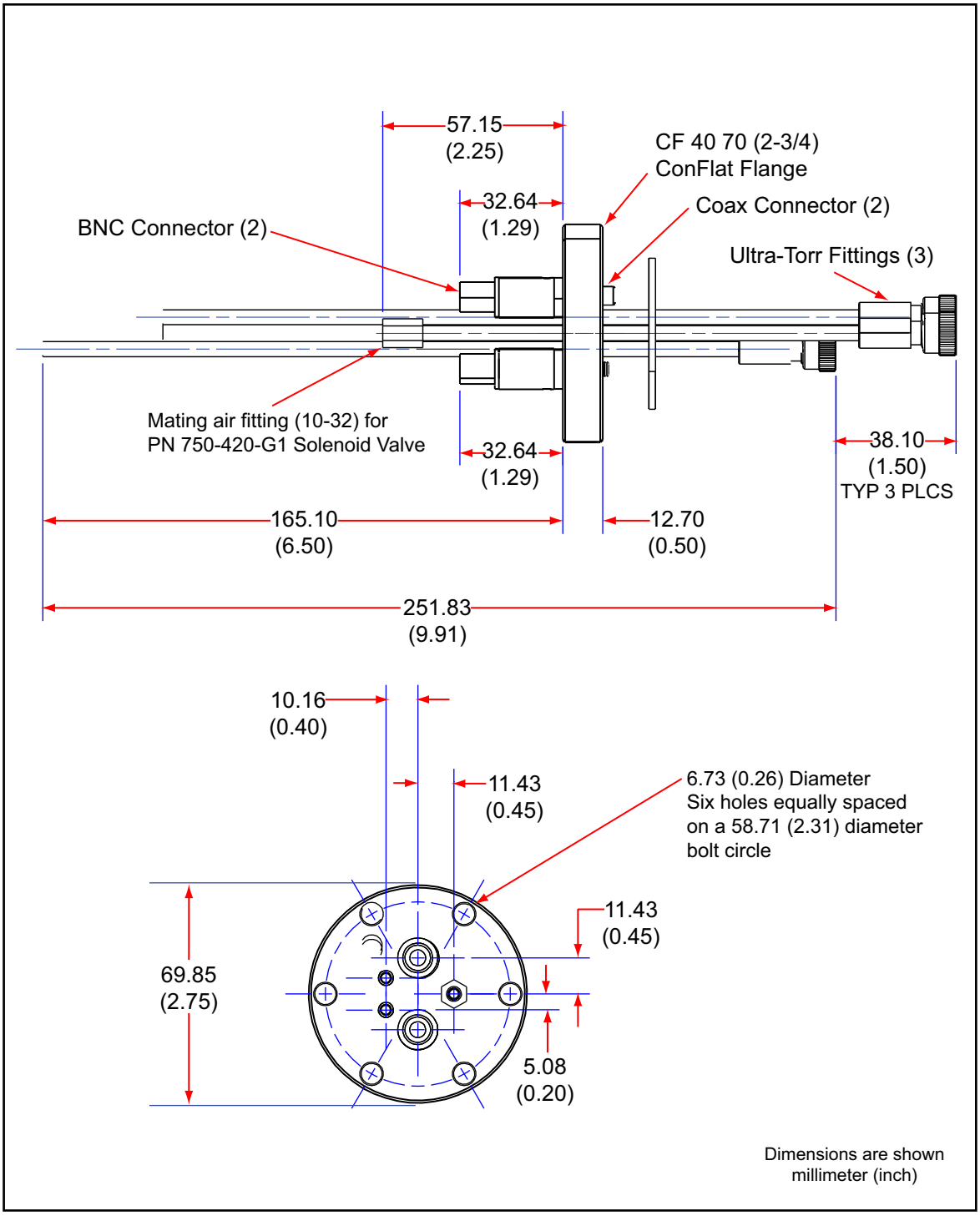


PN 074-156O

*This page is intentionally blank.*

PN 074-156O

# Chapter 2
# Sensor Installation

## 2.1 Pre-installation Sensor Check

Prior to installing the sensor in the vacuum system, make certain that it is in proper working condition by following the appropriate procedure.

### 2.1.1 Sensor Check with IMC300, XTC/3, IC6, or Cygnus 2 Deposition Controller

1. Connect the in-vacuum cable from the sensor head to the feedthrough or a coax adapter (Microdot/BNC).
2. Connect one end of the 15.2 cm (6 in.) BNC cable (PN 755-257-G6) to the BNC connector on the feedthrough.
3. Connect the other end of the 15.2 cm (6 in.) BNC cable to the connector of the ModeLock oscillator (XIU) (PN 781-600-GX).
4. Connect one end of the XIU cable (PN 600-1261-PXX) to the mating connector of the XIU.
5. Connect the other end of the XIU cable to a sensor channel at the rear of the controller.
6. Install the crystal as instructed by section 4.2 on page 4-2.
7. Connect power to the controller.
8. Set the power switch to ON.
9. Set density at 1.00 g/cm$^3$.
10. Zero the thickness. The display should indicate 0 or ± 0.001 kÅ. Crystal life should read from 0 to 5%.
11. Breathe heavily on the crystal. A thickness indication of 1.000 to 2.000 kÅ should display. When the moisture evaporates, the thickness indication should return to approximately zero. If these conditions are observed, the sensor is in proper working order and may be installed (see section 2.2 on page 2-4).

PN 074-156O

### 2.1.2 Sensor Check with STM-2XM, STM-3, SQM-160, SQC-310, SQM-242, or IQM-233 Deposition Controller/Monitor

1. Connect the in-vacuum cable from the sensor head to the feedthrough or a coax adapter (Microdot/BNC).
2. Connect one end of the 15.2 cm (6 in.) BNC cable (PN 782-902-011) to the BNC connector on the feedthrough.
3. Connect the other end of the 15.2 cm (6 in.) BNC cable to the connector of the oscillator (PN 782-900-010 or 783-500-013) labeled **Feedthrough** or **Sensor**.
4. Connect one end of the oscillator cable (PN 782-902-012-XX) to the mating connector of the oscillator labeled **Instrument** or **Control Unit**.
5. Connect the other end of the oscillator cable to a sensor connector at the rear of the controller/monitor.
6. Install the crystal as instructed by section 4.2 on page 4-2.
7. Connect power to the controller.
8. Set the power switch to ON.
9. For the SQM-242 card, IQM-233 card, or STM-3, launch the appropriate software.
10. Set density at 1.00 g/cm$^3$.
11. Zero the thickness. The display should indicate 0 or ± 0.001 kÅ. Crystal life should read from 95 to 100%.
12. Breathe heavily on the crystal. A thickness indication of 1.000 to 2.000 kÅ should display. When the moisture evaporates, the thickness indication should return to approximately zero. If these conditions are observed, the sensor is in proper working order and may be installed (see section 2.2 on page 2-4).

PN 074-156O

### 2.1.3 Sensor Check with Q-pod™ or STM-2 Deposition Monitor

1. Connect the in-vacuum cable from the sensor head to the feedthrough or a coax adapter (Microdot/BNC).
2. Connect one end of the 15.2 cm (6 in.) BNC cable (PN 782-902-011) to the BNC connector on the feedthrough.
3. Connect the other end of the 15.2 cm (6 in.) BNC cable to the connector of the Q-pod or STM-2.
4. Connect one end of the USB cable (PN 068-0472) to the mating connector of the Q-pod or STM-2.
5. Connect the other end of the USB cable to a USB port on the computer being used to operate the Q-pod or STM-2.
6. Install the crystal as instructed by section 4.2 on page 4-2.
7. Launch the appropriate monitor software.
8. Set density at 1.00 g/cm$^3$.
9. Zero the thickness. The display will indicate 0 or ± 0.001 kÅ. Crystal life should read from 95 to 100%. The green indicator on the Q-pod or STM-2 should be illuminated.
10. Breathe heavily on the crystal. A thickness indication of 1.000 to 2.000 kÅ should display. When the moisture evaporates, the thickness indication should return to approximately zero. If these conditions are observed, the sensor is in proper working order and may be installed (see section 2.2).

PN 074-156O

### 2.1.4 Sensor Shutter Check

Temporarily connect an air supply to the actuator air tube. Use the manual override button on the solenoid valve (see Figure 3-2 on page 3-5 or Figure 3-3 on page 3-6), or other means, to activate and deactivate the pneumatic shutter several times.

**NOTE:** The air supply must be 70 psi (gauge) {85 psi (absolute)} (5.8 bar (absolute) [584 kPa (absolute)] (minimum) to 80 psi (gauge) {95 psi (absolute)} (6.5 bar (absolute)) [653 kPa (absolute)] (maximum).

**WARNING**

**Do not exceed 100 psi (gauge) {115 psi (absolute)} (7.9 bar (absolute)) [791 kPa (absolute)].**

**Connection to excessive pressure may result in personal injury or equipment damage.**

When activated, shutter movement should be smooth, rapid, complete, and the shutter should completely expose the crystal opening. When deactivated, the shutter should completely cover the crystal opening. Repositioning of the shutter may be required to achieve optimum positioning. To adjust the position of the shutter on the shutter shaft, loosen the socket screw on the shutter assembly, rotate the shutter to the desired position, and tighten the socket screw.

**NOTE:** A Solenoid Valve (PN 750-420-G1) is required with any new shutter installation. See Chapter 3 for more information on the Solenoid Valve and its installation.

## 2.2 Sensor Installation Guidelines

Install the sensor as far as possible from the evaporation source (a minimum of 25.4 cm or 10 in.) while keeping the sensor in a position well within the evaporant stream to accumulate thickness at a rate proportional to accumulation on the substrate. Figure 2-2 on page 2-6 shows proper and improper methods of installing sensors.

Plan the installation to ensure that there are no obstructions blocking a direct path between the sensor and the source.

For best process reproducibility, support the sensor so that it cannot move during maintenance and crystal replacement.

Figure 2-1 shows the typical installation of an INFICON water-cooled crystal sensor in the vacuum process chamber. Use the illustration and the following guidelines to install sensors for optimum performance and convenience.

PN 074-156O

*Figure 2-1 Typical installation*

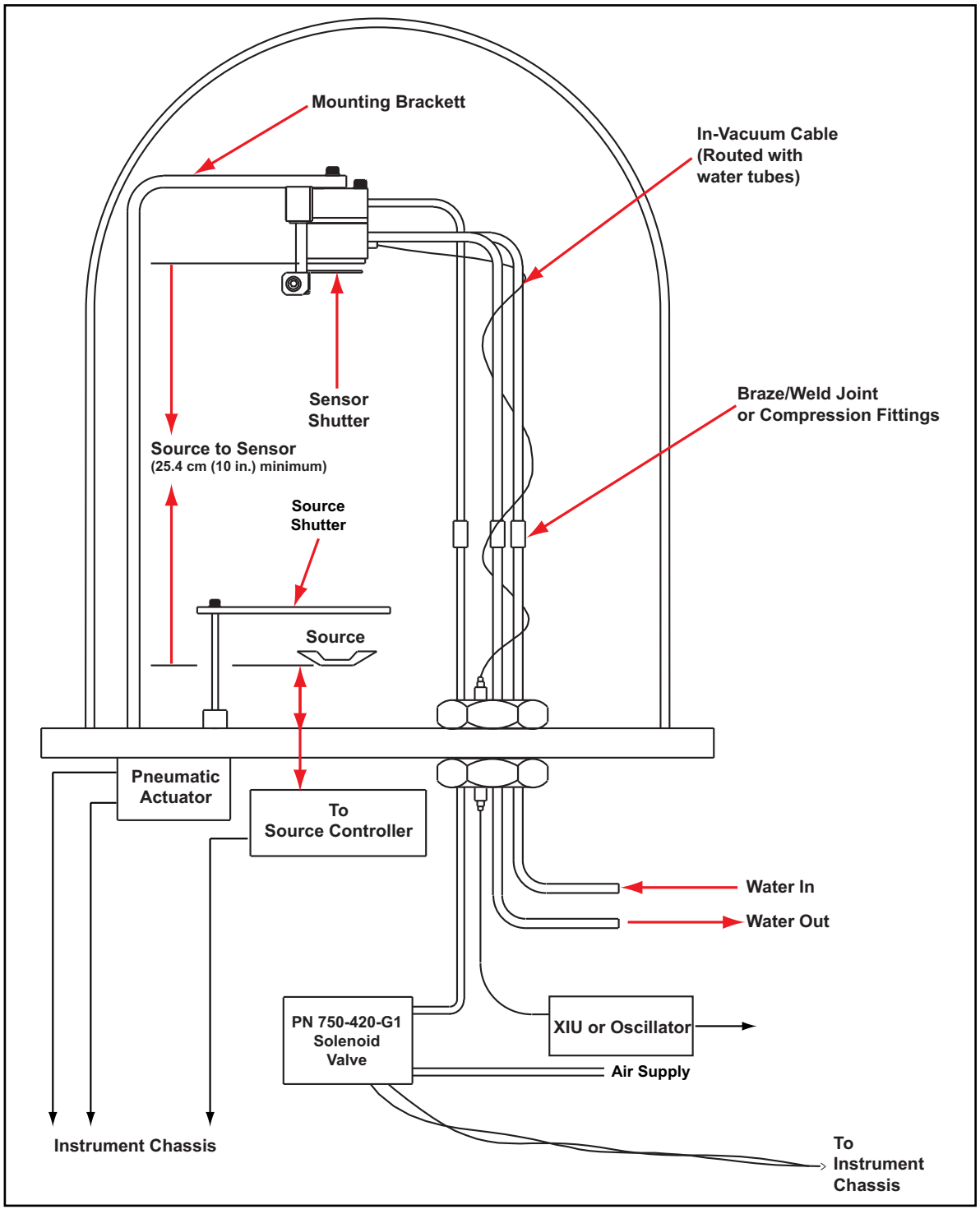

The sensor head must be installed such that the face of the crystal is perpendicular to the evaporant stream from the source (see Figure 2-2). Two effects may arise if the sensor head is not perpendicular to the evaporant stream, and the combination of these effects will have a negative effect on crystal life and increase the probability of mode hops:

- The deposit will not be even across the crystal surface. The edge of the crystal that is angled away from the source is farther away from the source and receives less material, causing the thickness of the deposit to become wedge shaped. This wedge shape in the deposited film tends to reduce the activity of the crystal at its primary resonance.
- The area of the deposit shifts from the center of the crystal. This is due to the shadowing effect of the crystal aperture. If the crystal is not square to the evaporant stream, the strength of spurious (non-thickness shear) modes of vibration are enhanced. If the activity of these spurious modes of oscillation become strong enough, they cause short-term perturbation of the fundamental frequency. If they get very strong, the oscillator can lock onto the spurious mode of oscillation, causing a mode hop.

*Figure 2-2 Sensor installation guidelines*

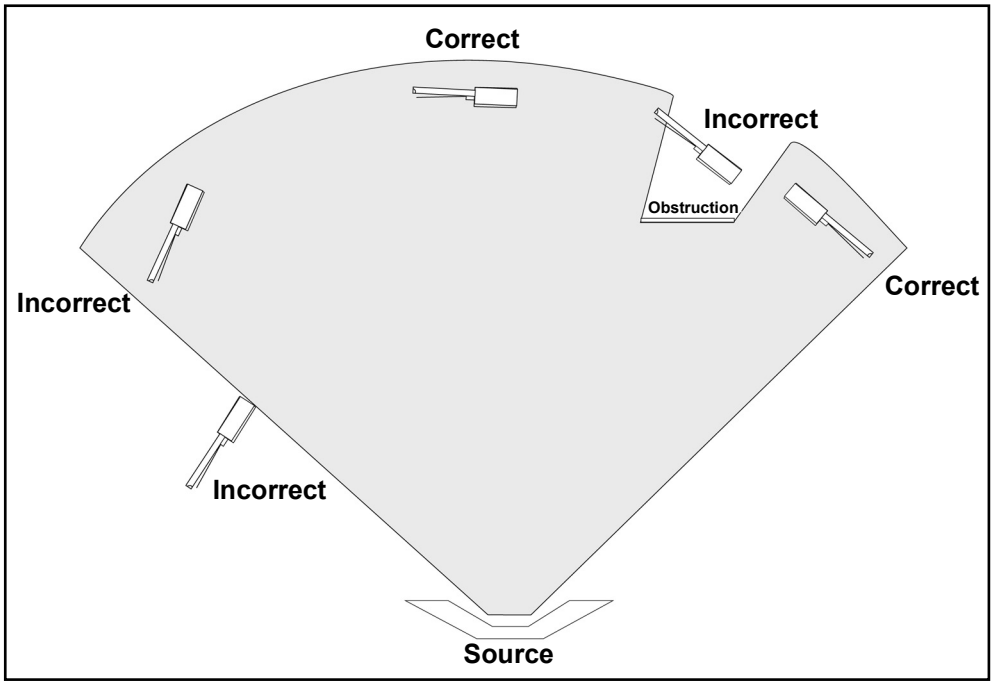


To guard against spattering, use a source shutter to shield the sensor during initial soak periods. If the crystal is hit with only a very small particle of molten material, it may be damaged and stop oscillating. Even in cases when it does not completely stop oscillating, the crystal may immediately become unstable, or shortly after deposition begins, instability may occur.

PN 074-156O

In many cases installing multiple sensors to monitor one source can improve thickness accuracy. The rules for multiple sensors are the same as for a single sensor installation, and the locations chosen must be as defined above. Consult the monitor or controller manual for more information regarding the availability of this feature.

**NOTE:** A technical description may be found in the 39th Annual Conference Proceedings, Society of Vacuum Coaters, *Reducing Process Variation Through Multiple Point Crystal Sensor Monitoring*, J. Kushneir, C. Gogol, J. Blaise, pp19-23, ISSN 0737-5921 (1996).

## 2.3 Sensor Installation Procedure

**CAUTION**

**The sensor head, water tubes, cable, etc., should be clean and free of grease when installed in the vacuum chamber. Clean nylon or talc-free gloves should be worn while handling any sensor components.**

**If parts do become contaminated, clean them thoroughly using a suitable solvent to avoid outgassing.**

**NOTE:** If the purchased sensor is a complete sensor/feedthrough combination and no modifications are required, start with step 9.

1. Assemble the sensor mounting bracket (provided by customer) on the process system.

   **NOTE:** Two tapped holes are provided on the back of each sensor body for attaching to the system. One additional tapped hole is provided on the back of the shutter assembly for added support.

2. Temporarily position and attach the sensor head as outlined in the general guidelines above (refer to Figure 2-1 on page 2-5).

3. Temporarily install the feedthrough.

PN 074-156O

***4*** Form, measure, and mark the sensor tubes (see section 2.3.1 on page 2-10).

**NOTE:** Use the Tube Bender Kit, PN 750-037-G1, provided with all non-welded sensors, to form the tubes.

**CAUTION**

**Do not form the sensor tubes with a bend radius less than 8 mm (0.315 in.) from the inside of the bend or 9.5 mm (0.375 in.) from the center line of the tubes.**

**Bends must be farther than 20 mm (0.79 in.) away from the braze joints on the tubes.**

**Do not use the sensor body as a leverage point. This may result in a failure of the braze joints on the tubes.**

***5*** Build the sensor/feedthrough assembly.

***6*** Remove the sensor and the feedthrough.

***7*** Cut the water cooling tubes and air tubes to the proper length. Verify that they are clear of metal particles by blowing compressed air through the tubing.

***8*** Connect the water cooling tubes and air tubes directly to the feedthrough, or use vacuum rated couplings.

- Vacuum rated connectors, such as Swagelok®, VCR®, or VCO®, are recommended for use between the sensor and the feedthrough to speed maintenance. If brazing adapters are to be used, attach them to the sensor water-cooling tubes prior to connection to the feedthrough. Make connections as follows:

**CAUTION**

**To prevent damage to the feedthrough or sensor during brazing, ensure that at least 2.54 cm (1 in.) of water tube remains between the sensor and the flame.**

- Clean the water tube and adapter surfaces with solvent, if necessary.
- Apply brazing flux to surfaces being joined.
- Braze the connections using a flame temperature appropriate for the brazing material being used.

PN 074-156O

**CAUTION**

**Excessive application of brazing material, or excessive heat due to brazing, may result in blockage of the water tube.**

- Verify that the tubes are not blocked with braze material by blowing compressed air through the tubes.
- Thoroughly clean the braze joint and helium leak test before installing the sensor and feedthrough into the process chamber.

***9*** With all water tube and air tube connections installed, install the sensor and feedthrough assembly into the process system and secure all retaining hardware.

***10*** Shield the coaxial cable from heat radiating from the evaporant source or the substrate heater. This can be accomplished, if the process allows, by wrapping aluminum foil around the cable and water tubes.

***11*** Connect the external water tubes from the feedthrough to the water supply system and flow controller. Use detachable couples (Swagelok or equivalent) for external water tube connections.

***12*** Apply water at the specified flow rate (refer to section 1.5.3, Installation Requirements, on page 1-8), and verify that the water connections are tight.

***13*** Attach air connection to solenoid valve (see Chapter 3) and adjust air pressure to be 70 psi (gauge) {85 psi (absolute)} (5.8 bar (absolute)) [584 kPa (absolute)] (minimum) to 80 psi (gauge) {95 psi (absolute)} (6.5 bar (absolute)) [653 kPa (absolute)] (maximum).

**WARNING**

**Do not exceed 100 psi (gauge) {115 psi (absolute)} (7.9 bar (absolute)) [791 kPa (absolute)].**

**Connection to excessive pressure may result in personal injury or equipment damage.**

**NOTE:** Because of geometric factors, variations in surface temperature, and differences in electrical potential, the crystal and substrates often do not receive the same amount of material. Calibration is required to make sure the thickness indication on the instrument accurately represents the thickness on the substrates. Refer to the instrument operating manual for calibration procedures.

PN 074-156O

### 2.3.1 Tube Bending

**CAUTION**

**Read this entire section before attempting to bend the tubes. Incorrect tube bending that damages the tubes voids the warranty.**

If it is necessary to bend the tubes to clear obstacles inside the chamber or to bring the sensor head into a proper mounting location, observe the following precautions:

- Support the tubes where the bends will be placed to avoid a tube being collapsed or pinched.

  **NOTE:** Use the Tube Bender Kit, PN 750-037-G1, provided with all non-welded sensors to bend the tubes.

  - If the water tube is collapsed, water flow will be restricted. The sensor will not have sufficient cooling.
  - If the air tube is collapsed, air pressure will be restricted. The shutter will not operate correctly.

**CAUTION**

**Do not form the sensor tubes with a bend radius less than 8 mm (0.315 in.) from the inside of the bend or 9.5 mm (0.375 in.) from the center line of the tubes.**

**Bends must be farther than 20 mm (0.79 in.) away from the braze joints on the tubes.**

**Do not use the sensor body as a leverage point. This may result in a failure of the braze joints on the tubes.**

The 3.175 mm (1/8 in.) tubes are flexible enough to bend, but they are not designed for repeated bending. Plan bends wisely. Before the actual tube bending, verify the bend position again to avoid readjusting. If in doubt, contact INFICON support, refer to section 1.3, How to Contact INFICON, on page 1-2.

PN 074-156O

## 2.4 Sensor Shutter Module Installation on Existing Equipment

Installation of sensor shutters on existing equipment requires a Shutter Module (PN 750-210-G1 or 750-210-G3, refer to section 1.5.4 on page 1-9). The Shutter Module may be installed on either the standard crystal sensor (SL-A0XXX-CN) or the right angle crystal sensor (SL-B0XXX-CN).

### 2.4.1 Shutter Module Installation on a Standard Crystal Sensor (PN SL-A0XXX-CN)

Refer to INFICON drawing PN 750-211, Figure 1-7 on page 1-11, and drawing PN 750-210, Figure 1-14 on page 1-21.

1. Remove the shutter to provide easier installation.
2. Rotate the shutter module until the holes through the mounting plate of the shutter module coincide with the #4-40 tapped holes in the rear side of the standard crystal sensor assembly.
3. Secure the shutter module to the standard crystal sensor assembly using the #4-40 x 9.5 mm (3/8 in.) hardware provided with the shutter module.
4. Hold the sensor with the crystal opening facing upward. Mount the shutter onto the shaft. Do not tighten the shutter.
5. Attach the shutter and position it directly over the center of the crystal opening. Tighten the shutter cap screw. Make certain that the shutter, when activated, does not block deposition of the evaporant stream onto any portion of the crystal.

### 2.4.2 Shutter Module Installation on a Right Angle Crystal Sensor (PN SL-B0XXX-CN)

Refer to INFICON drawing PN 750-210, Figure 1-14 on page 1-21, and drawing PN 750-213, Figure 1-9 on page 1-13.

1. Remove the shutter to provide easier installation.
2. Position the holes of the shutter module mounting plate over the #4-40 tapped holes in the rear of the right angle crystal sensor.
3. Secure the shutter module to the right angle crystal sensor assembly using the #4-40 x 9.5 mm (3/8 in.) hardware provided with the shutter module.
4. Hold the sensor with the crystal opening facing upward. Mount the shutter onto the shaft. Do not tighten the shutter.
5. Attach the shutter and position it directly over the center of the crystal opening. Tighten the shutter cap screw. Make certain that the shutter, when activated, does not block deposition of the evaporant stream onto any portion of the crystal.

PN 074-156O

*This page is intentionally blank.*

PN 074-156O

# Chapter 3
# Solenoid Valve Assembly Installation

## 3.1 Introduction

The solenoid valve assembly (PN 750-420-G1) and the feedthrough should be installed at the same time. The same solenoid valve is used for both the 2.54 cm (1 in.) bolt feedthrough and the CF40 (2-3/4 in. ConFlat) feedthrough.

- For an Installation with a 2.54 cm (1 in.) Bolt Feedthrough, see section 3.2 on page 3-1.
- For an Installation with a CF40 (2-3/4 in. ConFlat) Feedthrough, see section 3.3 on page 3-2.

## 3.2 Installation with a 2.54 cm (1 in.) Bolt Feedthrough

When installing the solenoid valve assembly with a dual sensor, a 2.54 cm (1 in.) bolt equipped with three pass tubes (two water and one air) and two coaxial feedthroughs (PN 750-707-G1-CN, refer to Figure 1-18 on page 1-28) is required.

All other shuttered sensors using 2.54 cm (1 in.) bolt feedthroughs require only a single coaxial feedthrough (PN 750-030-G1-CN, refer to Figure 1-17 on page 1-27).

Most INFICON 2.54 cm (1 in.) bolt feedthroughs with air lines are equipped with a fitting adapter (PN 007-133). This adapter provides an easy way to attach a quick disconnect fitting (included with the PN 750-420-G1-CN Solenoid Valve) to the feedthrough air line. The fitting adapter is available from INFICON for feedthroughs not equipped with this adapter.

Follow the steps below:

1. Ensure that the o-ring is in the groove on the bolt.
2. Insert the 2.54 cm (1 in.) bolt such that the hexagonal shaped end of the bolt is on the vacuum side of the chamber.
3. Add the solenoid valve bracket to the bolt threads.
4. Add the washer.
5. Add the feedthrough nut.
6. Tighten the feedthrough nut.
7. Remove the quick disconnect air fitting from the exhaust port of the solenoid valve and thread it into the fitting adapter (PN 007-133) installed on the feedthrough air line.

PN 074-156O

***8*** Connect the 3.175 mm (1/8 in.) air tube from the **A** port of the solenoid valve to the quick disconnect fitting installed in step 7, see section 3.4, Pneumatic Connections, on page 3-4.

***9*** Attach the **P** port of the solenoid valve to a source of air. The air supply must be 70 psi (gauge) {85 psi (absolute)} (5.8 bar (absolute)) [584 kPa (absolute)] (minimum) to 80 psi (gauge) {95 psi (absolute)} (6.5 bar (absolute)) [653 kPa (absolute)] (maximum), see section 3.4, Pneumatic Connections, on page 3-4.

**WARNING**

**Do not exceed 100 psi (gauge) {115 psi (absolute)} (7.9 bar (absolute)) [791 kPa (absolute)].**

**Connection to excessive pressure may result in personal injury or equipment damage.**

**CAUTION**

**Maximum temperature for the solenoid valve assembly is 105 °C for bakeout and operation.**

***10*** Make electrical connections to the solenoid valve (see section 3.5, Electrical Connections, on page 3-4).

## *3.3 Installation with a CF40 (2-3/4 in. ConFlat) Feedthrough*

If the solenoid valve assembly is to be used with the CF40 (2-3/4 in. ConFlat) feedthrough, modify the valve bracket as follows (see Figure 3-2 on page 3-5).

***1*** Align the score line on the solenoid valve bracket over the edge of a table or other square edge.

***2*** Using pliers, grasp the part of the bracket extending over the edge and push down. The assembly will break along the score line.

***3*** Use a file to smooth any rough edges that occur along the break.

When installing the solenoid valve assembly with a dual sensor, a CF40 (2-3/4 in. ConFlat) feedthrough equipped with three pass tubes (two water and one air) and two coaxial feedthroughs (PN 002-080-CN, refer to Figure 1-22 on page 1-32, or PN 206-890-G2-CN, Figure 1-25 on page 1-35) is required.

All other shuttered sensors using CF40 (2-3/4 in. ConFlat) feedthroughs require only a single coaxial feedthrough (PN 750-685-G1-CN, refer to Figure 1-21 on page 1-31, or PN 750-685-G2-CN, Figure 1-24 on page 1-34).

PN 074-156O

INFICON CF40 (2-3/4 in. ConFlat) feedthroughs with air lines are equipped with a fitting adapter (PN 007-133). This adapter provides an easy way to attach a quick disconnect fitting (included with the 750-420-G1 Solenoid Valve) to the feedthrough air line.

Follow the steps below:

1. Install the feedthrough.
2. Add the valve bracket (modified) to the desired location (shown in Figure 3-3 on page 3-6) using two of the 6.35 mm (1/4 in.) clamp bolts located on the flange.
3. Tighten the flange bolts.
4. Remove the quick disconnect air fitting from the exhaust port of the solenoid valve and thread it into the fitting adapter (PN 007-133) installed on the feedthrough air line.
5. Connect the 3.175 mm (1/8 in.) air tube from the **A** port of the solenoid valve to the quick disconnect fitting installed in step 4 (see section 3.4, Pneumatic Connections, on page 3-4).
6. Attach the **P** port of the solenoid valve to a source of air. The air supply range is 70 psi (gauge) {85 psi (absolute)} (5.8 bar (absolute)) [584 kPa (absolute)] (minimum) to 80 psi (gauge) {95 psi (absolute)} (6.5 bar (absolute)) [653 kPa (absolute)] (maximum) (see section 3.4, Pneumatic Connections, on page 3-4).

**WARNING**

**Do not exceed 100 psi (gauge) {115 psi (absolute)} (7.9 bar (absolute)) [791 kPa (absolute)].**

**Connection to excessive pressure may result in personal injury or equipment damage.**

**CAUTION**

**Maximum temperature for the solenoid valve assembly is 105°C for bakeout and operation.**

7. Make electrical connections to the solenoid valve (see section 3.5, Electrical Connections, on page 3-4)

PN 074-156O

## 3.4 Pneumatic Connections

*Figure 3-1 Pneumatic solenoid valve tube connections*

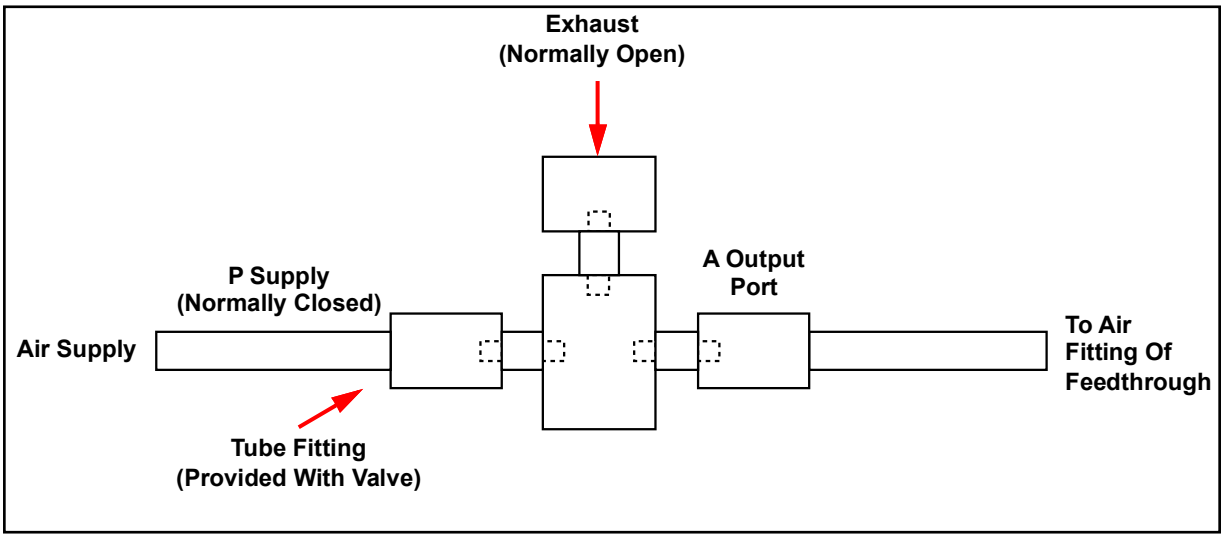


## 3.5 Electrical Connections

To complete installation of the assembly, make electrical connections where indicated in Figure 3-3 on page 3-6 to either 24 V(ac) or V(dc). Current required is approximately 70 mA.

**CAUTION**

**The maximum applied voltage must not exceed 26 V (ac) or 26 V (dc).**

## 3.6 Solenoid Valve Drawings

The following Solenoid Valve Outline Drawings provide dimensions and other relevant data necessary for planning equipment configurations.

Figure 3-2 on page 3-5. . . . . Solenoid Valve (PN 750-420-G1)

Figure 3-3 on page 3-6. . . . . CF40 (2-3/4 in. ConFlat) Dual Coaxial Feedthrough and Solenoid Valve Outline

PN 074-156O

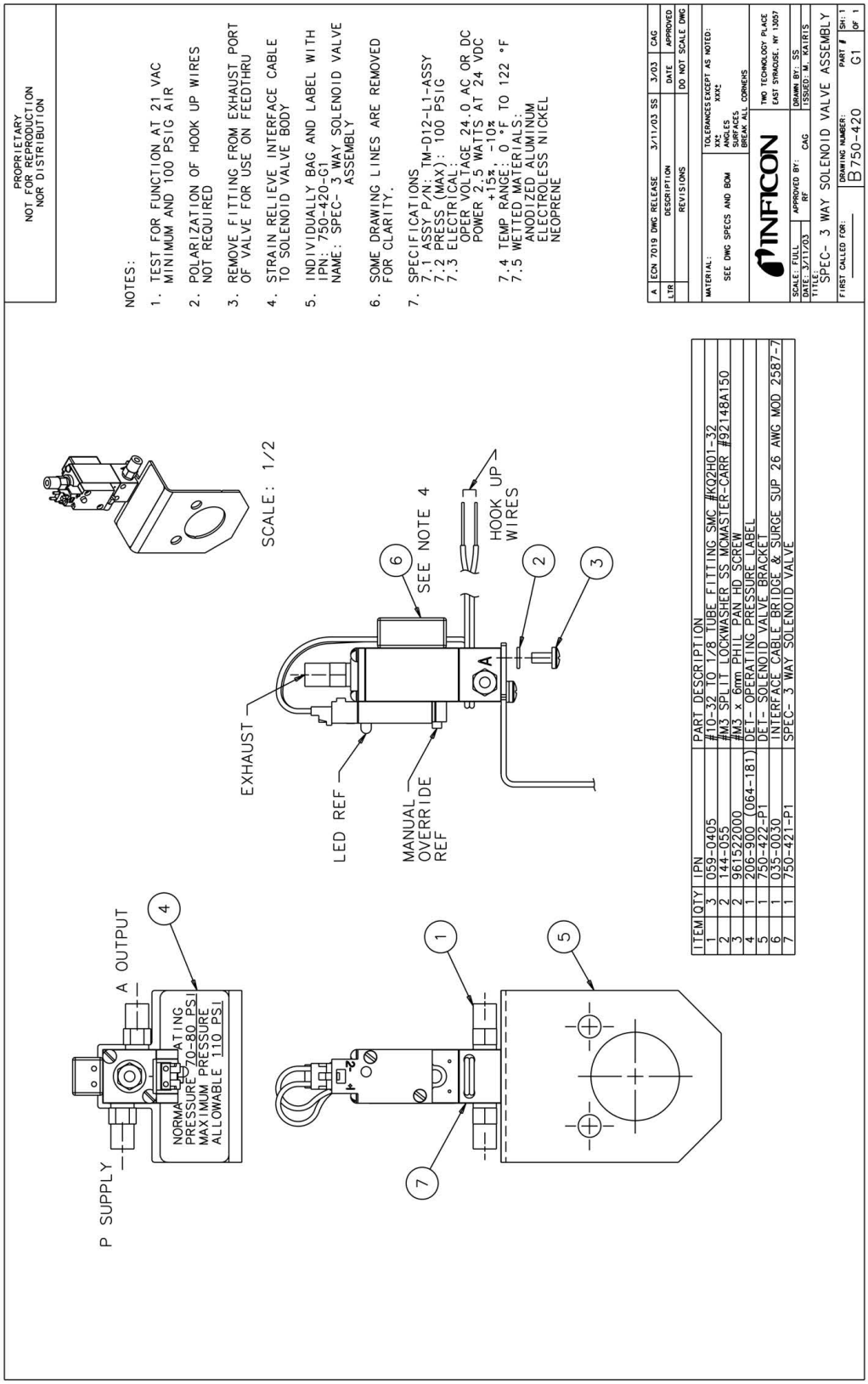


*Figure 3-2 Solenoid valve*

PN 074-156O

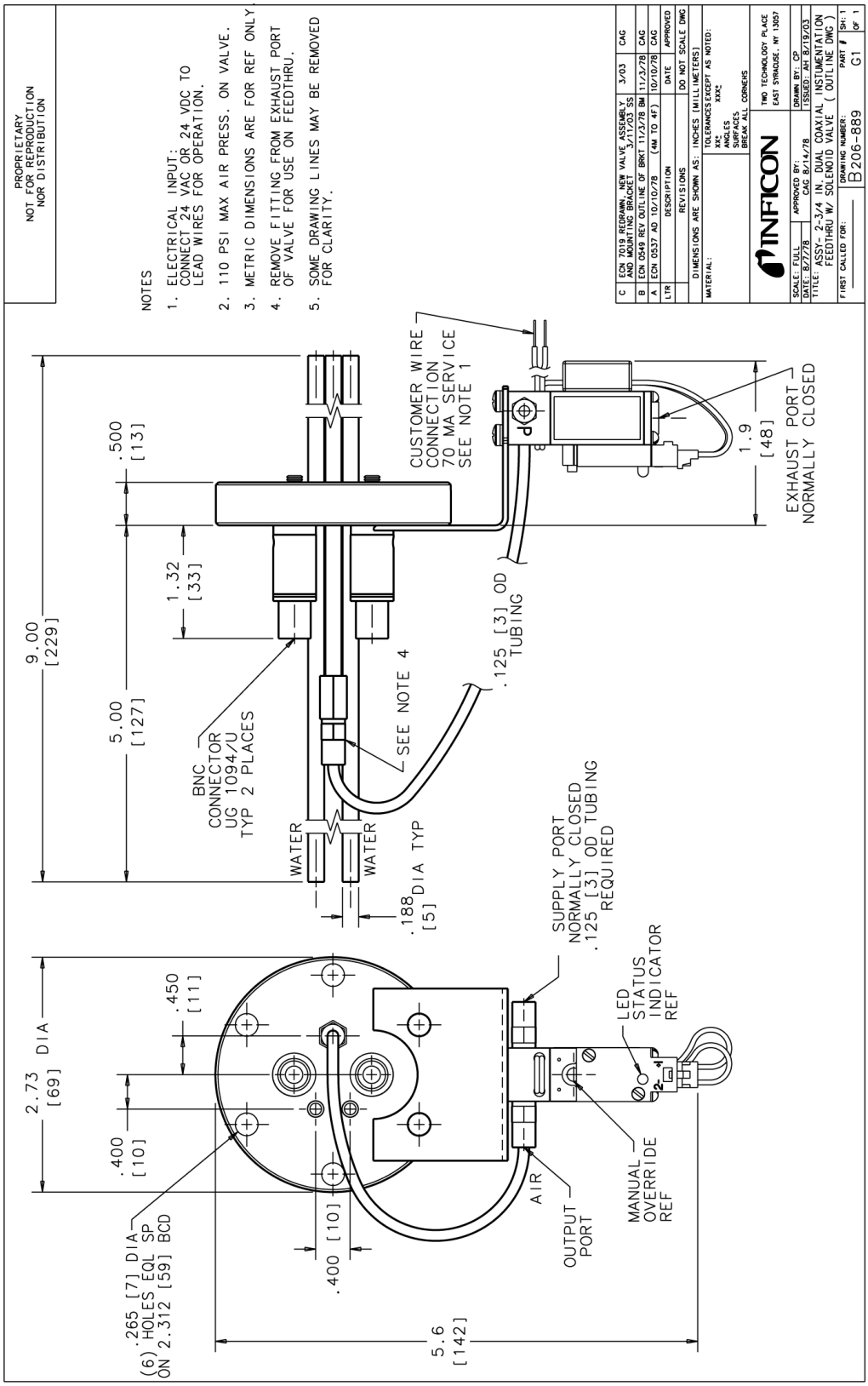


*Figure 3-3 CF40 (2-3/4 in. ConFlat) dual coaxial feedthrough and solenoid valve outline*

# Chapter 4
# Maintenance and Spare Parts

## 4.1 General Precautions

**CAUTION**

**Wear clean nylon or talc-free latex lab gloves when handling sensor components. If sensor components become contaminated, clean them thoroughly using a suitable solvent to avoid outgassing under vacuum.**

### 4.1.1 Handle the Crystal with Care

The crystal surfaces are easily contaminated; handle the crystals only by their edges, and always use clean nylon lab gloves when handling crystal holders and retainers and clean Teflon tweezers when handling crystals. If using a vacuum pencil to handle crystals, be sure the vacuum pencil tip is clean and not contaminated.

Contamination can lead to poor film adhesion. Poor film adhesion will result in high rate noise and premature crystal failure.

**CAUTION**

**Do not use metal tweezers to handle crystals.**
**Metal tweezers may chip the edge of the crystal.**

PN 074-156O

### 4.1.2 Use the Optimum Crystal Type

Silver crystals are recommended for sputtering and other applications with sustained high heat loads.

Certain materials, especially dielectrics, may not adhere strongly to the crystal surface and may cause erratic readings. For many dielectrics, adhesion is improved by using alloy crystals.

Gold is preferred for other applications. Contact INFICON for crystal material electrode recommendations for a specific evaporant application (refer to section 1.3 on page 1-2).

### 4.1.3 Maintain the Temperature of the Crystal

Periodically measure the water flow rate leaving the sensor to verify that the flow rate meets or exceeds the flow rate value specified on page 1-8.

Depending upon the condition of the cooling water used, the addition of an in-line water filtering cartridge system may be necessary to prevent flow obstructions.

Many system coaters use parallel water supplies that provide high water flow rates. With a parallel water supply, an obstruction or closed valve in the pipe that supplies water to the sensor head may not result in a noticeable reduction of total flow. Therefore, monitor the flow leaving the sensor, not the flow entering the sensor.

The crystal requires sufficient water cooling to sustain proper operational and temperature stability. Ideally, a constant heat load is balanced by a constant flow of water at a constant temperature.

INFICON quartz crystals are designed to provide the best possible stability under normal operating conditions.

No crystal can completely eliminate the effects of varying heat loads. Sources of heat variation include radiated energy emanating from the evaporant source and from substrate heaters.

**NOTE:** Water cooling temperature near the dew point in the room should be avoided. Condensation can cause early crystal failures.

It is recommended that water cooling temperature be maintained at 5 to 10°C above the dew point in the room during a vent of the system. Water cooling temperature can be lowered to a temperature less than 30°C under vacuum.

### 4.1.4 Crystal Concerns when Opening the Chamber

Thick deposits of some materials, such as SiO, Si, and Ni will normally peel off the crystal when it is exposed to air due to changes in film stress caused by gas absorption. When peeling is observed, replace the crystal.

## 4.2 Crystal Replacement Instructions

Follow the steps below to replace the crystals (see Figure 4-2 on page 4-4).

**NOTE:** Review section 4.1, General Precautions, on page 4-1.

**CAUTION**

**To preserve cleanliness and to maximize crystal performance, perform all work in a clean room environment.**

1 Wearing clean nylon gloves, grip the crystal holder and pull it straight out of the sensor body.

PN 074-156O

2 Insert the tapered end of the crystal snatcher (PN 008-007) into the ceramic retainer, see Figure 4-1 (**A**), and apply a small amount of pressure. This locks the retainer to the snatcher and allows the retainer to be pulled straight out. See Figure 4-1 (**B**).

*Figure 4-1 Using the crystal snatcher*

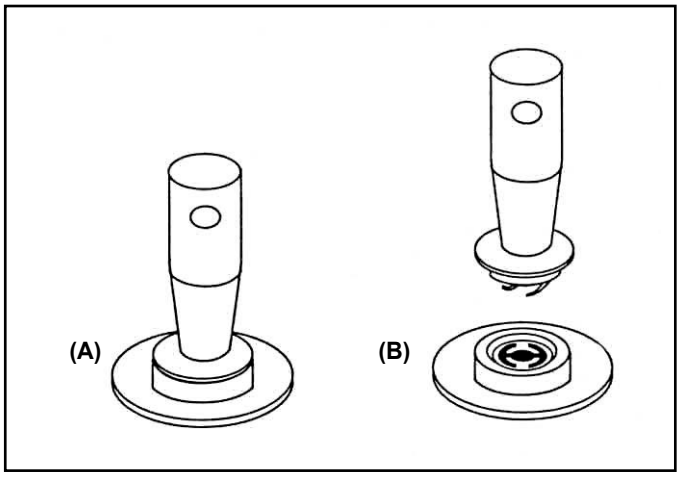


3 Invert the crystal holder and the crystal will drop out.

4 Prior to installing the new crystal, review section 4.1.1, Handle the Crystal with Care, on page 4-1.

5 Grasp the edge of the new crystal with a clean pair of Teflon tweezers. Orient the crystal so the patterned electrode is facing up. Gently insert the edge of the crystal beneath one of the wire segments that protrude into the crystal cavity. Release the crystal.

6 Replace the ceramic retainer. Initially orient it at an angle to displace the spring wire segments in the crystal holder.

**CAUTION**

***Do not use excessive force* when handling the Ceramic Retainer Assembly since breakage may occur. Always use the crystal snatcher.**

***To prevent scratching* the crystal electrode, do not rotate the ceramic retainer after installation.**

7 Release the crystal snatcher with a slight side-to-side rocking motion. Using the backside of the crystal snatcher, push on the ceramic retainer to ensure it is completely seated.

8 Reinstall the holder in the sensor body; push the holder straight in making certain that it is completely seated in the sensor body.

PN 074-156O

*Figure 4-2 Standard crystal sensor (exploded)*

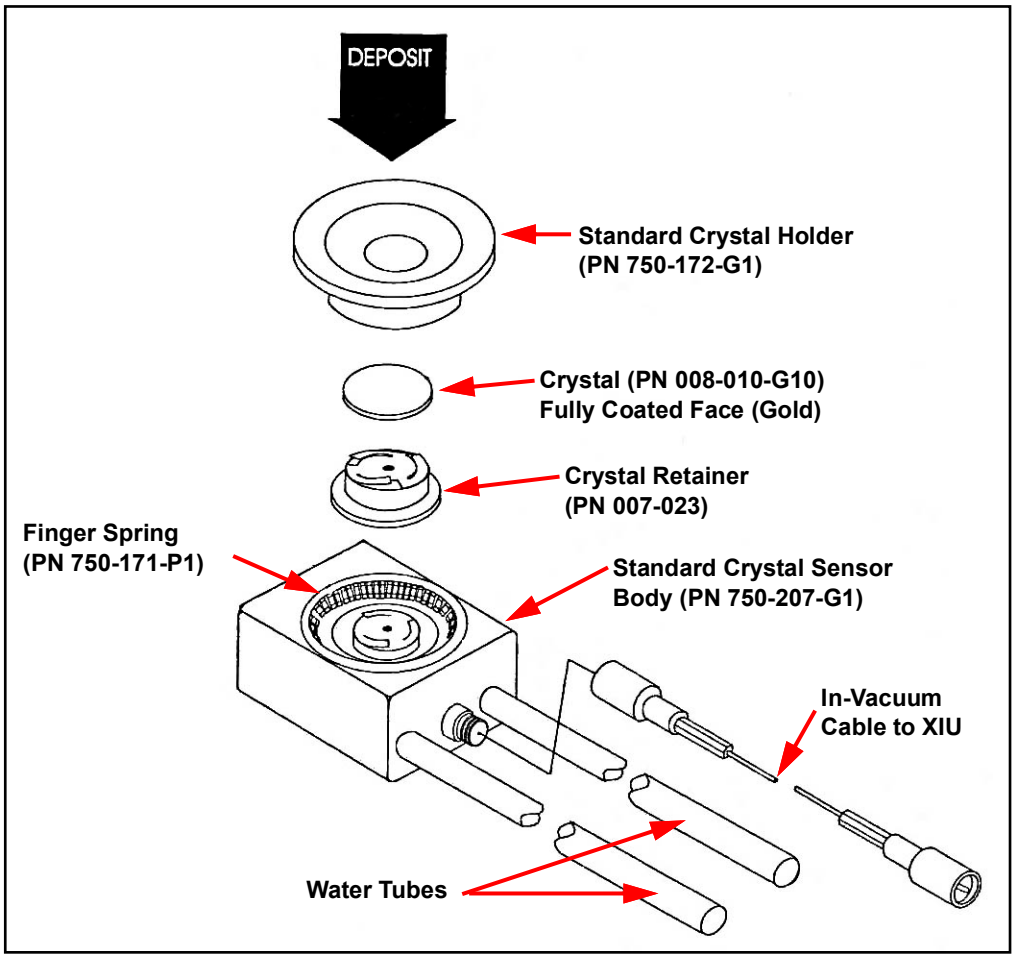


**CAUTION**

**Never deposit material on a sensor unless the crystal holder and crystal are installed. Material improperly deposited on the exposed sensor body assembly will cause either complete failure to oscillate or lead to premature crystal failure. Removing the deposited material requires extensive rework and new components.**

PN 074-156O

## 4.3 Sensor Maintenance

These maintenance requirements apply to the Front Load Single and Dual crystal sensors.

### 4.3.1 Adjusting the Leaf Spring

Front Load sensors have two leaf springs with three prongs each:

- a leaf spring inside the sensor head cavity that provides an electrical connection to the back of the ceramic retainer. This leaf spring is preformed and heat treated, and should not require adjustment.
- a leaf spring on the ceramic retainer that provides an electrical connection to the crystal electrode.

Examine the prongs on the leaf spring positioned on the ceramic retainer. If they are significantly lower than shown by Figure 4-3, they should be adjusted to an angle of approximately 45 degrees.

**NOTE:** A leaf spring adjusted to 45 degrees will flatten slightly after being inserted into and extracted from the crystal holder.

*Figure 4-3 Ceramic retainer*

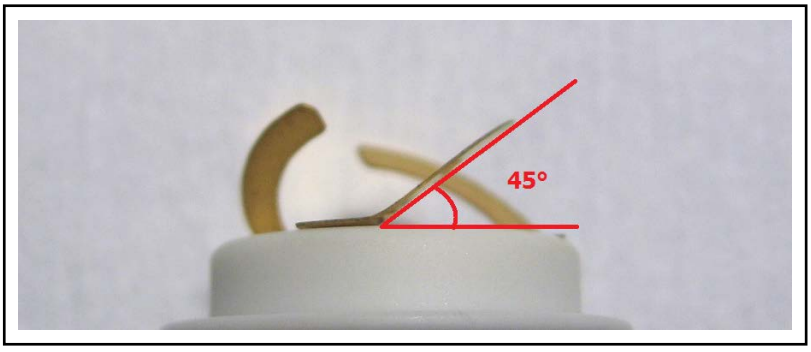


To adjust the prongs on the leaf spring positioned on the ceramic retainer, touch the end of the prong with a gloved finger, or grip the prong with Teflon tweezers, and gently lift it upward. Be careful not to kink the prongs. An ideal bend has a smooth, sweeping shape as shown by Figure 4-4.

*Figure 4-4 Leaf spring shape*

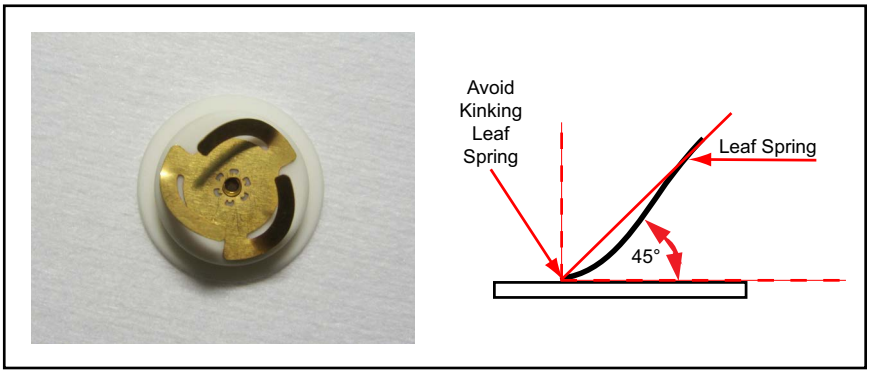

### 4.3.2 Cleaning the Crystal Holder

In dielectric coating applications, the crystal seating surface of the crystal holder may require periodic cleaning. Since most dielectrics are insulators, any material buildup on this surface from an evaporation process can cause a poor electrical contact between the crystal and the crystal holder. Material buildup will also cause a reduction in thermal transfer from the crystal to the sensor body. A poor electrical contact or poor thermal transfer will result in noisy operation and early crystal failure.

Cleaning may be accomplished by following three steps:

1. Gently buffing the crystal seating surface in the crystal holder with a white, #7445 Scotch-Brite™ cleaning pad (see Figure 4-5).
2. Washing the crystal seating surface in the crystal holder in an ultrasonic bath in soap solution.
3. Thorough rinsing of the crystal seating surface in the crystal holder with deionized water and drying, or by ultrasonic cleaning and deionized water rinsing only.

**NOTE:** The crystal holder seating surface is machined to a very fine finish (16 micro inches rms). This high quality finish is essential to provide good electrical and thermal contact with the crystal.

**CAUTION**

**Applying excessive force during cleaning or using overly abrasive cleaning materials may damage this finish and reduce sensor performance.**

*Figure 4-5 Crystal holder cleaning*

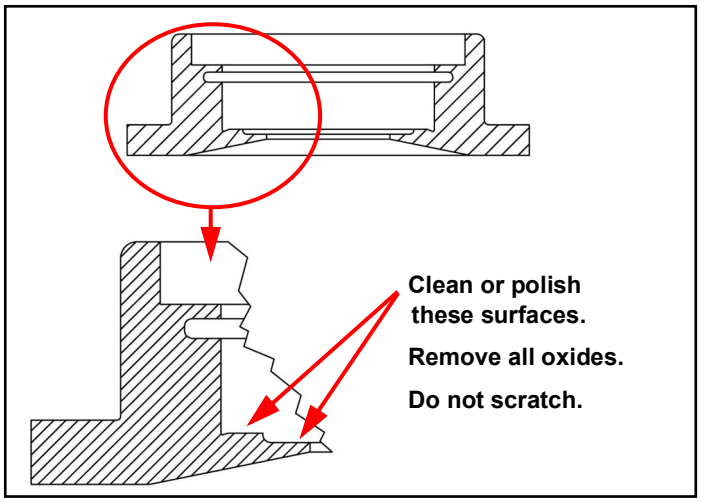


PN 074-156O

### 4.3.3 Adjusting the Crystal Holder Retainer Spring

If the ceramic retainer is not being retained securely by the crystal holder, or if the ceramic retainer if difficult to insert, the retention force of the retainer spring in the crystal holder can be adjusted by the following procedure.

**Tools required**

- Scribe or other pointed tool
- Needle nose pliers (two required)

**Procedure**

1. Position the crystal holder with the crystal aperture oriented downward.
2. Insert the point of the scribe between the inside edge of the crystal holder and either side of the exposed retainer spring, see Figure 4-6 (**a**).

*Figure 4-6 Location of the transition point*

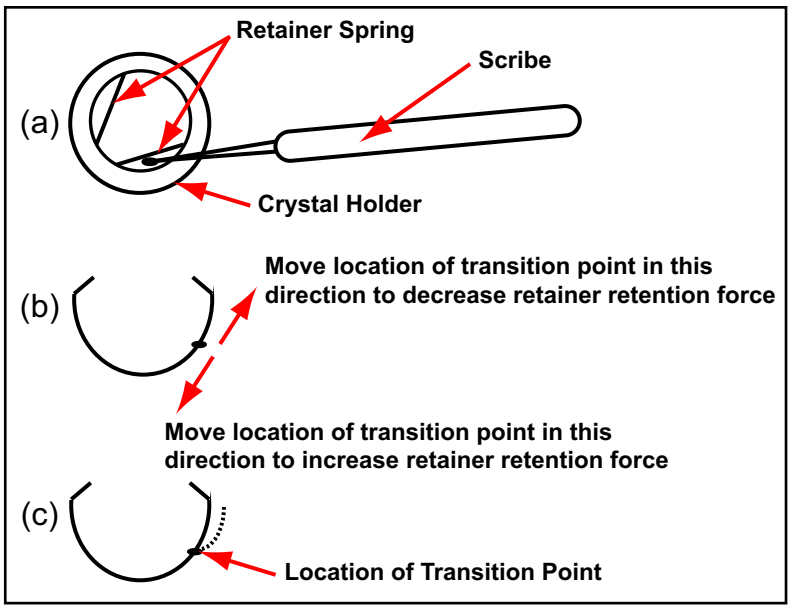


3. Using the scribe, gently remove the retainer spring from its groove in the crystal holder.
4. Refer to Figure 4-6 (**b**) to determine the direction in that the 'transition point' must be relocated, to attain the desired retention forces. Moving this transition point approximately 1.59 mm (1/16 in.) is generally sufficient.
5. Grasp the retainer spring, with the pliers, just below the transition point. Use the second set of pliers to bend the retainer spring as illustrated by the dashed line in Figure 4-6 (**c**) to remove the existing transition point.
6. Use both pliers to form a new transition point according to Figure 4-6 (**b**), thus returning the retainer spring to a shape similar to the solid line delineation of Figure 4-6 (**c**).
7. Reinstall the retainer spring into the groove in the crystal holder.
8. Determine if the retention force is acceptable and that the wire does not impede crystal insertion. If needed, repeat the adjustment procedure.

### *4.3.4 Replacing the Finger Spring*

The finger spring (PN 750-171-P1) that retains the crystal holder in the sensor head cavity should be replaced when the crystal holder is no longer being held securely in the sensor head cavity, or after approximately 4000 crystal holder extractions.

**NOTE:** The actual number of crystal holder extractions before the retention force is significantly reduced will vary based on process conditions.

Proceed as follows to replace the finger spring.

***1*** Extract the crystal holder. (Refer to section 4.2 on page 4-2).

***2*** Remove the finger spring with a pair of tweezers. (See Figure 4-7.)

***3*** Insert the new finger spring, allowing it to expand and conform to the inner diameter of the sensor assembly as shown in Figure 4-7.

**NOTE:** The finger springs are formed and heat treated to a diameter that is larger than the diameter of its groove to aid in assembly and retention.

***4*** Verify that the finger spring is contained in the groove, by running a finger along the inner lip of the sensor assembly, and verify that the finger spring has not overlapped onto itself. This will ensure that the finger spring will not be damaged during crystal holder installation.

***5*** Insert the crystal holder.

*Figure 4-7 Finger spring replacement*

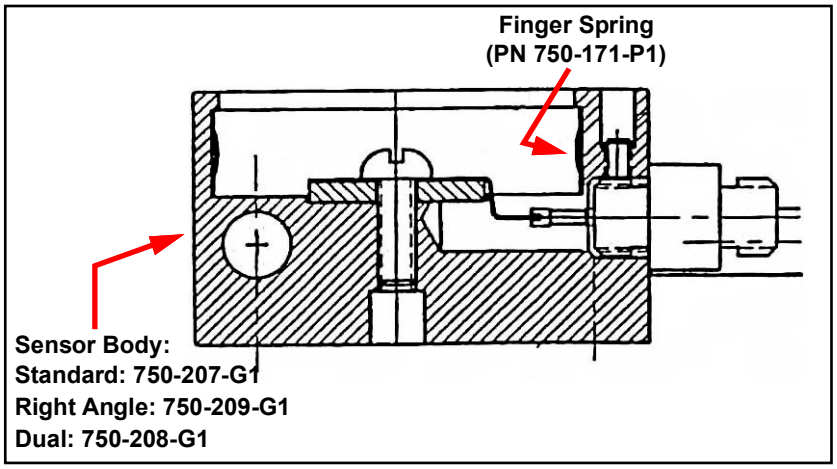


PN 074-156O

### 4.3.5 Lubricating the Shutter Module

The shutter module should be lubricated approximately every 2000 strokes at areas specified as shown in Figure 4-8. Failure to lubricate the shutter module may significantly reduce life of operation or cause assembly to become inoperative.

For lubrication, use molybdenum disulfide or use Fomblin® E25 (perfluorinated polyether), if appropriate for the process.

*Figure 4-8 Lubrication guide*

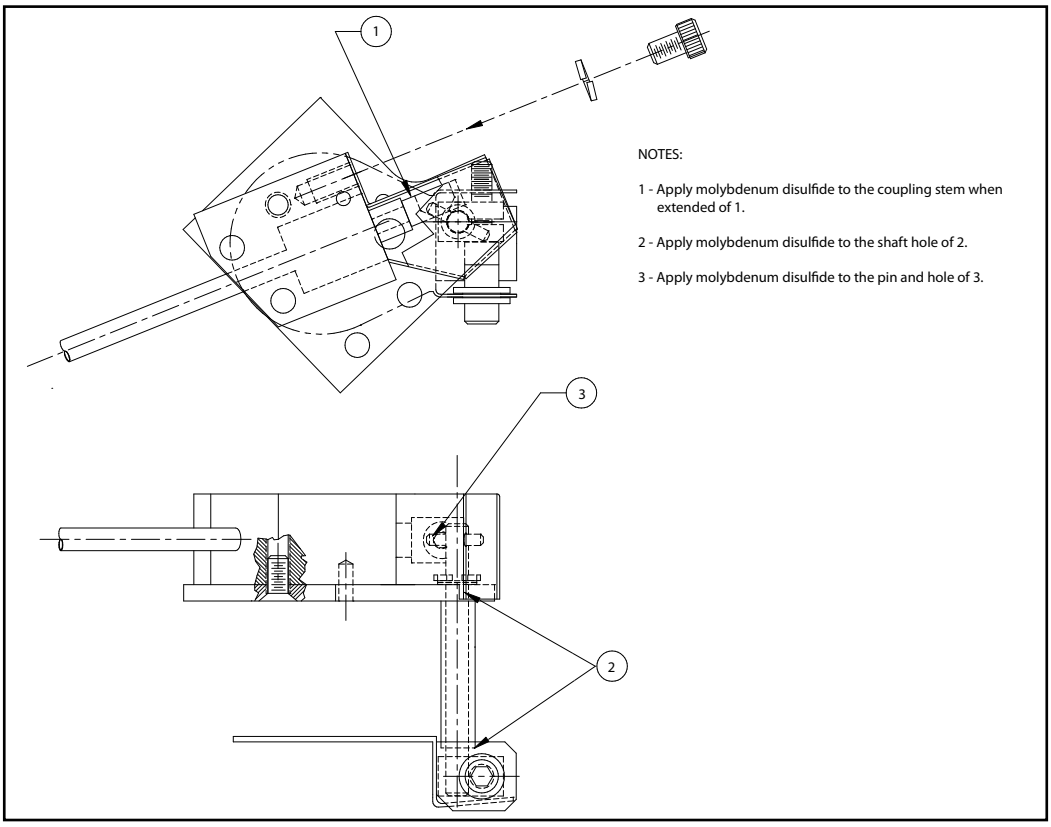

## 4.4 Spare Parts and Accessories

Single Body Assembly with Tubing

- Standard 76 cm (30 in.) . . . . . PN 750-207-G1
- Standard 122 cm (48 in.) . . . . . PN 750-207-G2
- Right Angle 76 cm (30 in.) . . . . . PN 750-209-G1
- Right Angle 122 cm (48 in.) . . . . PN 750-209-G2

Dual Body Assembly with Tubing

- Standard 76 cm (30 in.) . . . . . PN 750-208-G1
- Standard 122 cm (48 in.) . . . . . PN 750-208-G2

Ceramic Retainer . . . . . PN 007-023

Crystal Holder . . . . . PN 750-172-G1

Finger Spring . . . . . PN 750-171-P1

Leaf Spring . . . . . PN 750-188-P3

Ceramic Insulator . . . . . PN 750-175-P1

Teflon Screw . . . . . PN 082-044

Crystal Snatcher . . . . . PN 008-007

Shutter Module

- Standard 76 cm (30 in.) . . . . . PN 750-210-G1
- Extended 122 cm (48 in.) . . . . . PN 750-210-G3

Shutter . . . . . PN 750-216-G1

Tubing Adapter (#10-32) . . . . . PN 007-133

Material Director . . . . . PN 750-201-G1

**NOTE:** The material director replaces the crystal holder to minimize cross-talk deposition during code position processes. A shutter cannot be used on a sensor with a material director installed due to the collaminating tube on the material director.

PN 074-156O

In-Vacuum Cable

15.2 cm (6 in.). . . . . PN 321-039-G12

25.4 cm (10 in.) . . . . . PN 783-500-023

30.5 cm (12 in.). . . . . PN 007-252

61.0 cm (24 in.). . . . . PN 321-039-G11

76.2 cm (30 in.) . . . . . PN 783-500-024

78.1 cm (30.75 in.) . . . . . PN 007-044

91.4 cm (36 in.). . . . . PN 007-059

121.9 cm (48 in.). . . . . PN 007-061

152.4 cm (60 in.). . . . . PN 321-039-G13

182.9 cm (72 in.). . . . . PN 321-039-G14

3.5 m (137.8 in.) . . . . . PN 321-039-G15

4 m (157.5 in.) . . . . . PN 321-039-G16

**NOTE:** The cable length from the crystal to the oscillator should not exceed 101.6 cm (40 in.) unless a ModeLock instrument is used. Refer to the controller/monitor operating manual for cable length limitations.

PN 074-156O

*This page is intentionally blank.*

PN 074-156O

# Chapter 5 Troubleshooting

## 5.1 Troubleshooting Tools

If the Front Load Sensor fails to function, or appears to have diminished performance, diagnose the sensor using one or more of the following:

- Symptom, Cause, Remedy chart (see section 5.1.1)
- Digital Multimeter (see section 5.1.2 on page 5-3)

### 5.1.1 Symptom, Cause, Remedy

The Symptom, Cause, Remedy chart can help identify the causes of, and solutions to, sensor problems and related issues (see Table 5-1).

*Table 5-1 Symptom, Cause, Remedy*

| SYMPTOM | CAUSE | REMEDY |
|---|---|---|
| Large jumps of thickness reading during deposition. | Mode hopping due to damaged or heavily damped crystal. | Replace the crystal. |
| | Crystal is near the end of its life. | |
| | Scratches or foreign particles on the crystal holder seating surface. | Clean or polish the crystal seating surface of the crystal holder. Refer to section 4.3.2 on page 4-6. |
| | Uneven coating. | Mount the sensor with the crystal face perpendicular to the evaporant stream. Refer to section 2.2 on page 2-4. |
| | Particles on the crystal. | Remove source of particles and replace the crystal. |

PN 074-156O

*Table 5-1 Symptom, Cause, Remedy (continued)*

| SYMPTOM | CAUSE | REMEDY |
|---|---|---|
| Crystal ceases to oscillate during deposition before it reaches its “normal” life. | Crystal is being hit by small droplets of molten material from the evaporation source. | Use a shutter to shield the sensor during initial period of evaporation.<br><br>Move the sensor farther from the source. |
| | Damaged crystal. | Replace the crystal. |
| | Deposition material on crystal holder opening is touching the crystal. | Remove material buildup from the crystal holder opening, being careful not to scratch the crystal seating surface. Refer to section 4.3.2 on page 4-6. |
| | Deposition material on crystal holder opening is partially masking the crystal. | |
| Short crystal life | Crystal life is highly dependent on process conditions of rate, power radiated from source, location, material, and residual gas composition. | |
| Crystal does not oscillate or oscillates intermittently (both in vacuum and in air). | Damaged crystal. | Replace the crystal. |
| | Sensor or feedthrough has electrical short or open, or poor electrical connections. | Check electrical continuity and isolation of sensor and feedthrough. See section 5.1.2 on page 5-3. |
| Crystal oscillates in vacuum but stops oscillation after open to air. | Crystal is near the end of its life; opening to air causes film oxidation, that increases film stress. | Replace the crystal. |
| | Excessive moisture accumulation on the crystal. | Turn off cooling water to sensor before venting vacuum chamber.<br><br>Flow hot water through the sensor when the vacuum chamber is open. |
| Thermal instability: large changes in thickness reading during source warm-up (usually causes thickness reading to decrease) and after the termination of deposition (usually causes thickness reading to increase). | Crystal is not properly seated, causing poor thermal transfer from crystal to crystal holder. | Check and clean the crystal seating surface of the crystal holder. Refer to section 4.3.2 on page 4-6. |

PN 074-156O

*Table 5-1 Symptom, Cause, Remedy (continued)*

| SYMPTOM | CAUSE | REMEDY |
|---|---|---|
| Thermal instability: large changes in thickness reading during source warm-up (usually causes thickness reading to decrease) and after the termination of deposition (usually causes thickness reading to increase). | Crystal not properly seated. | Check and clean the crystal seating surface of the crystal holder. Refer to section 4.3.2 on page 4-6. |
| | Excessive heat applied to the crystal. | If heat is due to radiation from the evaporation source, move sensor farther away from source and use Low Thermal Shock crystals (PN SPC-1157-G10) for better thermal stability. |
| | No cooling water. | Check cooling water flow rate. |
| Poor thickness reproducibility. | Erratic source emission characteristics. | Move sensor to a different location.<br><br>Check the evaporation source for proper operating conditions.<br><br>Ensure relatively constant pool height and avoid tunneling into the melt.<br><br>Use multiple sensor option if available on controller. |
| | Material does not adhere to the crystal. | Check the cleanliness of the crystal.<br><br>Use gold or silver or alloy crystals, as appropriate.<br><br>Evaporate an intermediate layer of proper material on the crystal to improve adhesion. |

PN 074-156O

## 5.1.2 Digital Multimeter

A useful tool for diagnosing sensor problems is the Digital Multimeter (DMM).

To isolate the cause of a sensor problem, perform electrical isolation and continuity checks, starting with the Electrical Isolation Check, section 5.1.2.1.

### 5.1.2.1 Electrical Isolation Check

1. Remove the Crystal Holder from the sensor head.
2. Disconnect the short BNC cable from the feedthrough.
3. Select the DMM ohmmeter function and high resistance (MΩ) scale.
4. At the feedthrough, measure resistance between center contact and shield of the BNC connector (shown by Figure 5-1).

- If resistance is more than 10 MΩ, electrical isolation is good. Go to section 5.1.2.2, Electrical Continuity Check, on page 5-6.
- If resistance is less than 10 MΩ, continue to step 5.

*Figure 5-1 Resistance check*

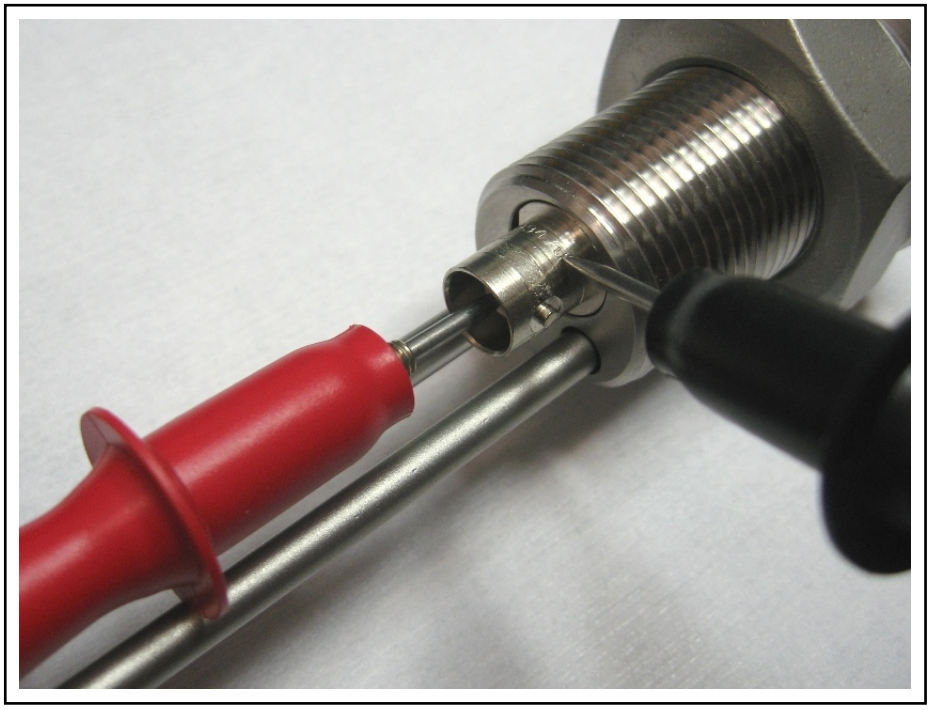

***5*** Disconnect the in-vacuum cable from the sensor head.

***6*** Measure resistance between center contact and shield of the BNC.

- If resistance is less than 10 MΩ, continue to step 7.
- If resistance is more than 10 MΩ, continue to step 6a.

***6a*** Measure resistance between the center contact and threads of the coaxial connector on the sensor head (shown by Figure 5-2). If resistance across the coaxial connector is less than 10 MΩ, examine the sensor head cavity and coaxial connector for the cause of the low resistance. Contact INFICON if cause of low resistance is not found (refer to section 1.3, How to Contact INFICON, on page 1-2).

PN 074-156O

*Figure 5-2 Sensor head isolation check*



***7*** Disconnect the in-vacuum cable from the feedthrough.

***8*** Measure resistance between center contact and shield of the BNC.

- If resistance is less than 10 MΩ, continue to step 8a.
- If resistance is more than 10 MΩ, continue to step 9.

***8a*** Examine the feedthrough for the cause of the low resistance. Contact INFICON if cause of low resistance is not found (refer to section 1.3, How to Contact INFICON, on page 1-2).

***9*** Replace the in-vacuum cable.

***10*** Measure resistance between center contact and shield of the BNC.

- If resistance is more than 10 MΩ, electrical isolation is good. Go to section 5.1.2.2, Electrical Continuity Check, on page 5-6.
- If resistance is less than 10 MΩ, contact INFICON.

PN 074-156O

#### 5.1.2.2 Electrical Continuity Check

**1** Select the DMM ohmmeter function and a low resistance scale.

**NOTE:** The resistance specifications in the following steps do not take into account the resistance of the Digital Multimeter probes. Touch the probe tips together and note the resistance reading. Compensate for probe resistance by subtracting probe resistance from resistance measurements, or by zeroing the ohmmeter while the probes are touching.

**2** Remove the crystal (if installed) from the crystal holder and reinstall the ceramic retainer into the crystal holder.

**3** Measure the resistance between the ceramic retainer and crystal holder (shown by Figure 5-3).

- If resistance is less than 0.3 Ω, continue to step 4.
- If resistance is more than 0.3 Ω, correct the cause of the high resistance before continuing to step 4. Check the following:
  - Cleanliness of the crystal seating surface inside the crystal holder. Refer to section 4.3.2, Cleaning the Crystal Holder, on page 4-6.
  - Angle of the leaf spring on the ceramic retainer. Refer to section 4.3.1, Adjusting the Leaf Spring, on page 4-5.
  - Verify that the leaf spring and circular plate on the ceramic retainer are tightly held together by the rivet.

*Figure 5-3 Resistance between ceramic retainer and crystal holder*



**4** Install the crystal holder with ceramic retainer and without the crystal into the sensor. Make sure the crystal holder is held securely in the sensor head cavity. If the crystal holder is loose, refer to section 4.3.4, Replacing the Finger Spring, on page 4-8.

PN 074-156O

**5** At the feedthrough, measure resistance between center contact and shield of the BNC connector (refer to Figure 5-1).

- If resistance is less than 1 Ω, electrical continuity is good.
- If resistance is more than 1 Ω, check the following before continuing to step 6:
  - Verify that in-vacuum cable connections to sensor head and feedthrough are tight. Do not overtighten.
  - Remove the crystal holder and examine the leaf spring inside the sensor head cavity. The three prongs on the leaf spring should reach to approximately 1 mm (0.039 in.) from the top of the sensor head cavity. To check prong height, place a straight edge across the sensor head cavity (as shown by Figure 5-4). If the prongs are not high enough, gently bend each prong upward using a gloved finger or plastic tweezers.

*Figure 5-4 Leaf spring*

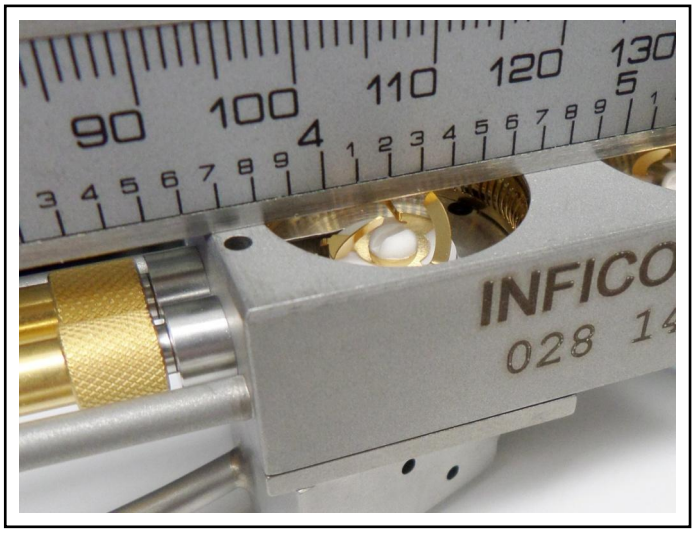


**6** Reinstall the crystal holder with ceramic retainer into the sensor.

**7** Measure resistance between center contact and shield of the BNC.

- If resistance is less than 1 Ω, electrical continuity is good.
- If resistance is more than 1 Ω, continue to step 8.

**8** Disconnect the in-vacuum cable from the sensor head and remove the crystal holder.

PN 074-156O

***9*** Measure resistance between the center contact of the coaxial connector and leaf spring (shown by Figure 5-5) being careful to place the probe at the base of the leaf spring to prevent damage to the prongs of the leaf spring.

- If resistance is more than 0.3 Ω, continue to step 9a.
- If resistance is less than 0.3 Ω, continue to step 10.

***9a*** Examine the solder connection between the leaf spring and coaxial connector. Contact INFICON if the cause of the high resistance is not found (refer to section 1.3, How to Contact INFICON, on page 1-2).

*Figure 5-5 Sensor head continuity check*

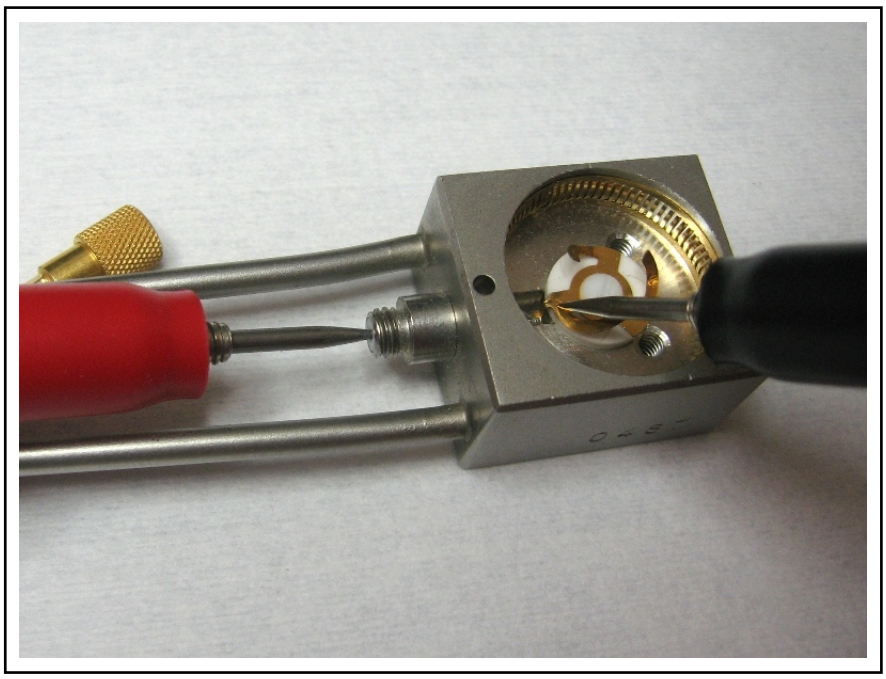

PN 074-156O

**10** Disconnect the in-vacuum cable from the feedthrough.

**11** At the feedthrough, measure resistance between the center contacts of the BNC and coaxial connectors (shown by Figure 5-6).

*Figure 5-6 Feedthrough Resistance*

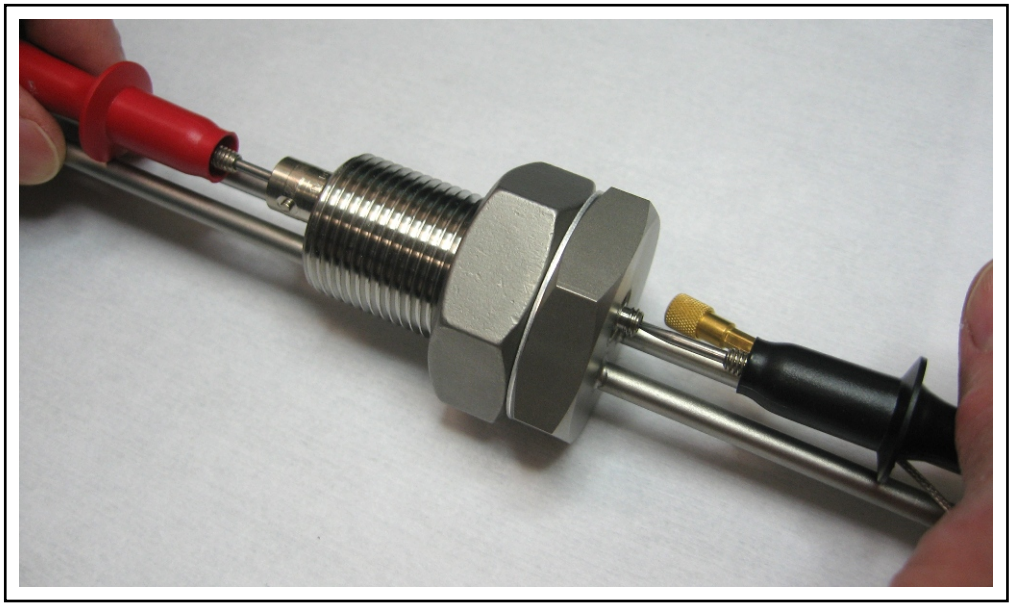

- If resistance is more than 0.3 Ω, contact INFICON (refer to section 1.3, How to Contact INFICON, on page 1-2).
- If resistance is less than 0.3 Ω, continue to step 12.

**12** Replace the in-vacuum cable.

**13** Reinstall the crystal holder with ceramic retainer and without the crystal into the sensor.

**14** Measure resistance between center contact and shield of BNC.

- If resistance is less than 1 Ω, electrical continuity is good.
- If resistance is more than 1 Ω, contact INFICON.

PN 074-156O

*This page is intentionally blank.*

PN 074-156O